PALBAM CLASS

CLEANROOM FURNITURE & EQUIPMENT

CATALOG **2024**

INTRODUCTION

Pharmaceutical & Biotech Customers

Pfizer
Amgen
Wyeth
Merck
Teva
GSK
Schering Plough
Pluristem
Protalix
Bachem
Allergan
Roche
Biovectra
Boston Scientific
Omrix
Fresenius Kabi
Biotechnology General
Genzyme
Johnson & Johnson
Sanofi
Abbott
Bayer
Eli Lilly
Gilead Sciences
Regeneron
Genentech

Semiconductor Customers

Texas Instruments
Intel
Applied Materials
KLA-Tencor
Nova Measuring
Wafertech
Western Digital
Georgia Institute
Orbotech
Tower-Jazz
Maxim Integrated
Global Foundries
Polar Semiconductor
Samsung
Qualcomm
Hynix
ST Microelectronics
Micron Technology
Analog Devices
Freescale
Semiconductor
On Semi

Palbam Class quality stainless steel products for clean rooms, include

- Work stations
- Dispensers
- Storage systems
- Gowning furniture
- Carts & Ladders
- Custom designs
- Desiccators
- Wafer cassettes

PALBAM CLASS CORE VALUES

- Listen to and understand our customers' needs and expectations
- Be committed to excellence in the quality of our products
- Be committed to excellence in the quality of our service

Palbam Class has developed a worldwide marketing, sales and support network, for the

- Semiconductor
- Pharmaceutical
- Biotechnology
- Related industries
- Thereby offering a local and personal service wherever you may be situated

Palbam Class unique services include

- Immediate delivery of selected catalog products
- "Flat Packed" product design for easy shipment
- Support for turnkey projects
- Engineering and design for custom products

FURNITURE

06 GOWNING

22 DISPENSERS

28 WORK STATIONS

44 STORAGE SYSTEMS

60 CLEANROOM SEATING

EQUIPMENT

64 DESICCATORS

70 CARTS & TOOL CARTS

74 LADDERS

76 WAFER CASSETTES

82 DISTRIBUTORS & PRICING

GOWNING

Unique Stainless Steel Solutions

- **Modern, aesthetic, ergonomic design**
- **Infinite layout options**
- **Suitable for all clean industries**
- **Fits all gown room sizes and procedures**
- **Modular, easy to install**

Palbam Class is a world-renowned Cleanroom Gowning Design and Furniture supplier. The extensive range of gownroom products designed and manufactured by Palbam Class is second to none. Palbam Class has a solution to every gownroom requirement, adding a touch of beauty to your cleanroom.

Palbam Class has fitted Gownrooms ranging from small interlocks up to high-density gownrooms serving 2000+ personnel.

Turnkey projects are our specialty.

The Gownroom is often the first impression for employees and visitors alike, that they are entering into a special area. Palbam Class products are guaranteed to ensure that your company will give the best possible impression, as well as serving all the ergonomic, cleanliness and functional requirements.

GOWNRACKS FOR FULL LENGTH COVERALLS

Ideal furniture, adding a touch of beauty to your gownroom. The modular design allows for various layout options.
Advantages of Palbam Class Gown Rack Design:
• Knock Down and completely modular - can be connected end to end or side to side or to walls.
• Unique rack design holds each hanger at exactly the same angle and spacing ensuring a uniform appearance, creating an image of orderliness and allowing sufficient laminar flow.
• Mirrors can be connected to side panels, enhancing both aesthetics and functionality.
• Highest quality workmanship insures aesthetic and functional properties are excellent.
• Each Gownrack is supplied with hangers and leveler legs with integral covers.
• Hangers - thickness of material ensures non-deforming.
Fabrication material: 304 stainless steel, electropolished.
• **Mirrors are optional**
Immediate delivery - in stock

Product	LxWxH (mm)	LxWxH (")	Cat. No.
Hanger unit 08 + Hangers	585x567x2100	23x22x83	**GR08CMP**
Hanger unit 16 + Hangers	947x567x2100	37x22x83	**GR16CMP**
Hanger unit 24 + Hangers	1328x567x2100	52x22x83	**GR24CMP**
Hanger unit 32 + Hangers	1709x567x2100	67x22x83	**GR32CMP**
Hanger unit 40 + Hangers	2090x567x2100	82x22x83	**GR40CMP**

GOWNRACKS FOR FROCKS AND LAB COATS

3 options available
standard gownrack for full length coveralls.
shorter gownrack for frocks and lab coats.
wall mount gownracks which can be used for both purposes.

Gownracks can be supplied on 3" cleanroom casters.
Write "Casters" after catalog number.

Product	LxWxH (mm)	LxWxH (")	Cat. No.
Hanger unit short 08 + Hangers	585x567x1750	23x22x69	**GR08CMP-S**
Hanger unit short 16 + Hangers	947x567x1750	37x22x69	**GR16CMP-S**
Hanger unit short 24 + Hangers	1328x567x1750	52x22x69	**GR24CMP-S**
Hanger unit short 32 + Hangers	1709x567x1750	67x22x69	**GR32CMP-S**
Hanger unit short 40 + Hangers	2090x567x1750	82x22x69	**GR40CMP-S**

WALL MOUNT GOWNRACKS

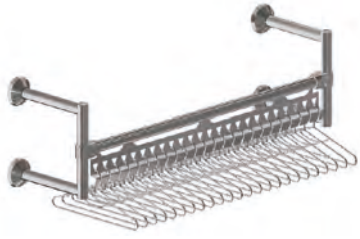

Product	LxWxH (mm)	LxWxH (")	Cat. No.
Wall Mount Garment Rack 8	585x468x470	23x19x19	**GRW08CMP**
Wall Mount Garment Rack 16	947x468x470	37x19x19	**GRW16CMP**
Wall Mount Garment Rack 24	1328x468x470	52x19x19	**GRW24CMP**
Wall Mount Garment Rack 32	1709x468x470	67x19x19	**GRW32CMP**
Wall Mount Garment Rack 40	2090x468x470	82x19x19	**GRW40CMP**

CEILING MOUNT GOWNRACK

New ceiling mount gownracks. Each gownrack is sent with the hangers included.
Fabrication materials: stainless steel 304 with electropolished finish.

Customizable to your ceiling height

Product	LxWxH (mm)	LxWxH (")	Cat. No.
Ceiling Mount Garment Rack 16	947x468x858	37x19x34	**GG0831**
Ceiling Mount Garment Rack 24	1328x468x858	52x19x34	**GG1131**
Ceiling Mount Garment Rack 32	1709x468x858	67x19x34	**GG1631**
Ceiling Mount Garment Rack 40	2090x468x858	82x19x34	**GG1931**

HANGERS

Hangers - thickness of material ensures non-deforming.
Fabrication material: 304 stainless steel, electropolished.

All gownracks include the correct amount of hangers - so there is no need to purchase separately. However they can be purchased separately if required.

Product	LxWxH (mm)	LxWxH (")	Cat. No.
Hanger	430x6x185		**OHL-EP**

WALL HOOKS

Wall Hooks of varying lengths provide a simple solution to hanging lab coats etc.
Fabrication material stainless steel 304 with electro-polished finish.

Product	LxWxH (mm)	LxWxH (")	Cat. No.
Wall Hook 5	400x94x28	16x4x1	**GJ0401**
Wall Hook 6	500x94x28	20x4x1	**GJ0501**
Wall Hook 10	1000x94x28	40x4x1	**GJ1001**

HEPA FILTERED GOWN CABINET

Palbam Class now offers HEPA filtered Gown Cabinets.

Gownrack with 22 hangers. HEPA filtration 99.995% @ 0.3 micron H14 Stainless steel 304L electro-polished construction.

0.45 m/s filter face airflow velocity. Variable Fan speed control. Electronic Touch Button Control Panel. Electronic Low Airflow Alarm with mute button.

Service due and service overdue alarm. Power requirements can be supplied for both US & European markets. Power usage 60 Watt . Leveler feet with covers.

HEPA cabinets can also be supplied with rod or perforated shelving for ultra-clean storage.

Product	LxWxH (mm)	LxWxH (")	Cat. No.
HEPA Filtered Gown Cabinet	1100x600x2300	43x24x90	**HJ1101**

Electronic Touch Button Control Panel

Close up of control panel

BOOTIE RACKS

Modular bootie cabinet comes in a variety of shelf lengths. Conforms to Garment Rack Design thereby ensuring uniformity of appearance throughout the gownroom. The cabinet can be shipped knock-down and is easy to assemble. Standard features include leveler legs with integral covers.
This product is symmetric so can be used from either side.
Mirrors are optional.
Fabrication material: 304 stainless steel, electropolished.

Product	LxWxH (mm)	LxWxH (")	Cat. No.
24 boot cabinet	383x400x2100	15x16x83	**BC24CMP**
32 boot cabinet	483x400x2100	19x16x83	**BC32CMP**
40 boot cabinet	583x400x2100	23x16x83	**BC40CMP**
48 boot cabinet	683x400x2100	27x16x83	**BC48CMP**
56 boot cabinet	783x400x2100	31x16x83	**BC56CMP**
Mirror for Bootie Rack Panel 2100mm height			**MR-03**

SHOE RACK 36

The Shoe Rack has 36 individual slots of 280mm / 11" which is suitable for most shoe storage requirements. Supplied on leveler duck type feet, allowing cabinets to be installed next to each other.
Fabrication materials: stainless steel 304 with electro-polished finish.

Product	LxWxH (mm)	LxWxH (")	Cat. No.
Shoe Rack 36	1212x405x2160	48x16x85	**GC1202**

MODULAR BENCHES

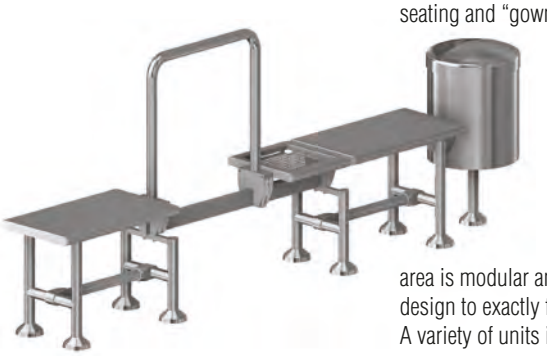

Modular Bench Type A

The Palbam Class™ Modular Bench for seating and "gowning up" in the gown area is modular and allows a flexible design to exactly fit every gown area. A variety of units in various dimensions can be attached in different ways to provide a custom made seating module. The seating module reduces the number of legs attached to the floor, making the cleaning process easy and the layout flexible.

Modular Bench Type B

Fabrication material: stainless steel 304 with electropolished finish

Product	LxWxH (mm)	LxWxH (")	Cat. No.
Modular Bench Type A	2510x360x1000	99x14x40	MOD BENCH-A
Modular Bench Type B	3800x360x470	150x14x19	MOD BENCH-B

GOWNING BENCHES

Features
- Rounded edges
- Electro-polished
- Height adjustable legs
- Leg covers (covers unsightly bolt connections to floor)

Benefits
- Ergonomic
- No snag points
- Ultraclean
- Quality Appearance

Fabrication material: stainless steel 304 with electropolished finish

Product	LxWxH (mm)	LxWxH (")	Cat. No.
Basic Cleanroom Bench	600x350x450	24x14x18	GB-0630
Basic Cleanroom Bench	800x350x450	32x14x18	GB-0830
Basic Cleanroom Bench	1000x350x450	40x14x18	GB-1030
Basic Cleanroom Bench	1200x350x450	48x14x18	GB-1230
Basic Cleanroom Bench	1400x350x450	55x14x18	GB-1430

Product	LxWxH (mm)	LxWxH (")	Cat. No.
Rod Type Class 1 Gown Bench	800x370x450	32x15x18	GB-0811
Rod Type Class 1 Gown Bench	1000x370x450	40x15x18	GB-1011
Rod Type Class 1 Gown Bench	1200x370x450	48x15x18	GB-1211
Rod Type Class 1 Gown Bench	1400x370x450	55x15x18	GB-1411

SWING OVER BENCH

The Swing Over bench is designed to assist in the Gowning Process. The raised platform assists in putting on Booties/Shoe Covers. The bench can also be used as a separation barrier between pre gowning and gowning areas. The optional connection pieces allow the benches to be joined together. Immediate delivery - in stock Fabrication material: 304 stainless steel, electropolished.

Product	LxWxH (mm)	LxWxH (")	Cat. No.
Swing Over Bench	850X350X450	34x14x18	**SGB-0850**
Bench Corner Connector 45˚			**GB0045**
Bench Corner Connector 90˚			**GB0090**
Bench Straight Connector 180˚			**GB0180**

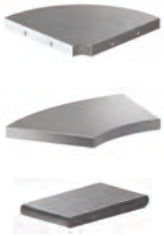

Corner connections
can also be used with Basic Gown Benches

Having difficulty putting on your shoe covers?
The Swing Over Bench Eliminates back bending!

2 x swing over bench with 1 x 90 degree connector

2 x swing over bench with 1 x 45 degree connector

2 x swing over bench with 1 x 180 degree connector

BOOTIE BENCH

The new Bootie Bench has 3 options

2 x Solid shelves underneath

Fabrication Material: Stainless Steel 304L with electro-polished finish.
Shipped flat packed.
Custom dimensions according to your requirements

Product	LxWxH (mm)	LxWxH (")	Cat. No.
Bootie Bench 2 undershelves	1000x473x550	40x19x22	**BB1047-2**
Bootie Bench 2 undershelves	1200x473x550	48x19x22	**BB1247-2**
Bootie Bench 2 undershelves	1400x473x550	55x19x22	**BB1447-2**

2 x Solid shelves with dividers spaced 100mm / 4" apart

Product	LxWxH (mm)	LxWxH (")	Cat. No.
Bootie Bench 2 undershelves + dividers	1000x473x550	40x19x22	**BB1047-2D**
Bootie Bench 2 undershelves + dividers	1200x473x550	48x19x22	**BB1247-2D**
Bootie Bench 2 undershelves + dividers	1400x473x550	55x19x22	**BB1447-2D**

2 x Solid shelves with dividers spaced 100mm / 4" apart & screen at rear to ensure separation

Product	LxWxH (mm)	LxWxH (")	Cat. No.
Bootie Bench 2 undershelves + dividers + screen	1000x473x550	40x19x22	**BB1047-2DS**
Bootie Bench 2 undershelves + dividers + screen	1200x473x550	48x19x22	**BB1247-2DS**
Bootie Bench 2 undershelves + dividers + screen	1400x473x550	55x19x22	**BB1447-2DS**

Wall Mount Fold Down Gowning Bench

The wall mount fold down gowning bench offers an ideal solution to cleanroom gown rooms where a regular bench would obstruct a passageway. Fabrication material: stainless steel 304L with electro-polished finish.

(Custom dimensions and sst 316 also possible) .The bench can be connected directly to the wall.

Custom dimensions are possible according to your layout.

If the wall is not strong enough we offer an extra leg which can be attached to the floor adjacent the wall.

Product	LxWxH (mm)	LxWxH (")	Cat. No.
Wall Mount Fold Down Gowning Bench	1200x353x457	48x14x18	**GB1250**
Fold Down Bench Leg Support	261x66x457	10.5x2.5x18	**GB0001**

WIPEDOWN TABLES

The Wipe Down table supports the wipe-down procedure in a perfect way and includes a waste-through opening on the table-top. The attached cabinet can be reverse mounted allowing for layout flexibility.
Fabrication material: 304 stainless steel, electropolished.

Product	LxWxH (mm)	LxWxH (")	Cat. No.
Wipe Down Table	1200x600x900	48x24x36	**WDT-1260**
Wipe Down Table	900x600x900	36x24x36	**WDT-0960**

Product	LxWxH (mm)	LxWxH (")	Cat. No.
Wipe Down Table - Front opening	500x600x900	20x24x36	**WDT-0560**

Product	LxWxH (mm)	LxWxH (")	Cat. No.
Wipe Down Table with Drawers on legs	800x500x1000	31.5x20x39.5	**GC0809**
Wipe Down Table with Drawers on casters	800x500x1000	31.5x20x39.5	**GC0809C**

FEEDER CABINETS

This modern design storage cabinet supports gowning operation from the gown room itself. Front access doors are used for reloading and for storage purposes. The bottom cabinet can be used for storage or disposal.
Perspex dispenser slots ensure that disposables or garments can be extracted one at a time and do not spill out.
Modular - available as:
4 compartments, 8 compartments and 12 compartments. Modifications are possible according to layout.
Fabrication material stainless steel 304 with electropolished finish.

Shipped flat packed with assembly instructions.

Can be customized with Sloping roofs or larger openings if required

Product	LxWxH (mm)	LxWxH (")	Cat. No.
Feeder - front load - front dispense 4	500x400x2000	20x16x79	**FFCS-0540-SST**
Feeder - front load - front dispense 8	1000x400x2000	40x16x79	**FFCS-1040-SST**
Feeder - front load - front dispense 12	1500x400x2000	60x16x79	**FFCS-1540-SST**

RECYCLE CABINETS

The recycle cabinet is used for disposing hairnets, shoe-covers, and other disposables when exiting the gown room. This unit helps keep the disposal process in-order.
A mirror is also available above the unit. Each compartment contains a waste bin. Fabrication material stainless steel 304 with electropolished finish.

Shipped flat packed with assembly instructions.

Product	LxWxH (mm)	LxWxH (")	Cat. No.
Recycle Cabinet - 1 door 1 hole	500x600x900	20x24x36	**RECYC-0050-SST**
Recycle Cabinet - 2 door 2 holes	1000x600x900	40x24x36	**RECYC-0100-SST**
Recycle Cabinet - 3 door 3 holes	1500x600x900	60x24x36	**RECYC-0150-SST**
Recycle Cabinet - 4 door 4 holes	2000x600x900	80x24x36	**RECYC-2000-SST**

MIRRORS

Mirrors are an integral part of the gowning process. The mirrors are safe with adhesive backing to prevent shattering and are mounted on a stainless steel plate.
A stainless steel frame enables easy mounting and guards the mirror from gownroom traffic.

There are 3 options :
MR-01: Free Standing, connected to the wall and floor. All weight is on the floor. Wall mount just provides anchor to prevent tipping.
MR-02: Mounted in side panel of Gown Racks
MR-03: Mounted in side panel of Bootie Racks

Product	LxWxH (mm)	LxWxH (")	Cat. No.
Full Length Mirror in Frame	600x40x2100	24x2x83	**MR-01**
Mirror for Gownrack Panel 2100mm height			**MR-02**
Mirror for Gownrack Panel 1750mm height			**MR-02-1750**
Mirror for Bootie Rack Panel 2100mm height			**MR-03**
Face Mirror	400x533x8mm	16x21x0.3"	**GM0450**

WASTE RECEPTACLES

WR-3001 - 50 liter capacity

WR-3002 - 40 liter capacity

WR-3003 - 40 liter capacity

Our round waste receptacle includes an internal nylon holder and lid. The lid has a large opening for easy disposal. No need to come in contact with the bin. (No flaps or other devices are attached, as these just increase contact between user and the waste bin).
The free-stand model is mounted on Casters which are hidden from view. Can also be mounted on a bench or to the wall or floor.
Immediate delivery - in stock
Fabrication material: 304 stainless steel, electropolished.

Product	LxWxH (mm)	LxWxH (")	Cat. No.
Waste Receptacle - Free Stand	355x355x650	14x14x26	**WR-3001**
Waste Receptacle - Floor Mount	355x355x700	14x14x28	**WR-3002**
Waste Receptacle - Wall mount	355x355x450	14x14x18	**WR-3003**
Large Waste Receptacle - Free Stand	500x500x700	20x20x28	**GW0501**

GW0501 - 115 Liter capacity

GW0401 - 48 Liter capacity
Pedal Opening

New
Pedal opening design.
Includes plastic bin inside.

Product	LxWxH (mm)	LxWxH (")	Cat. No.
Waste Receptacle with pedal opening lid (contains plastic bin inside)	407x410x608	16x16x24	**GW0401**

CLEANROOM LAYOUT

Palbam Class is a world leader in gown room furniture system design, manufacture and layouts. As such Palbam Class has a specially trained engineering team, with years of cleanroom experience. For large or small projects we recommend using our engineering team as they have intimate knowledge of all Palbam Class products and cleanroom layouts.

GOWN ROOM LAYOUT

A. Garment rack
B. Bootie Cabinet
C. Basic Bench
D. Modular Bench
E. Miscellaneous Cabinet
F. Final Glove Cabinet and Glove Dispenser
G. Mirror
H. Mirror for Bootie Cabinet
I. Mirror for Garment Rack

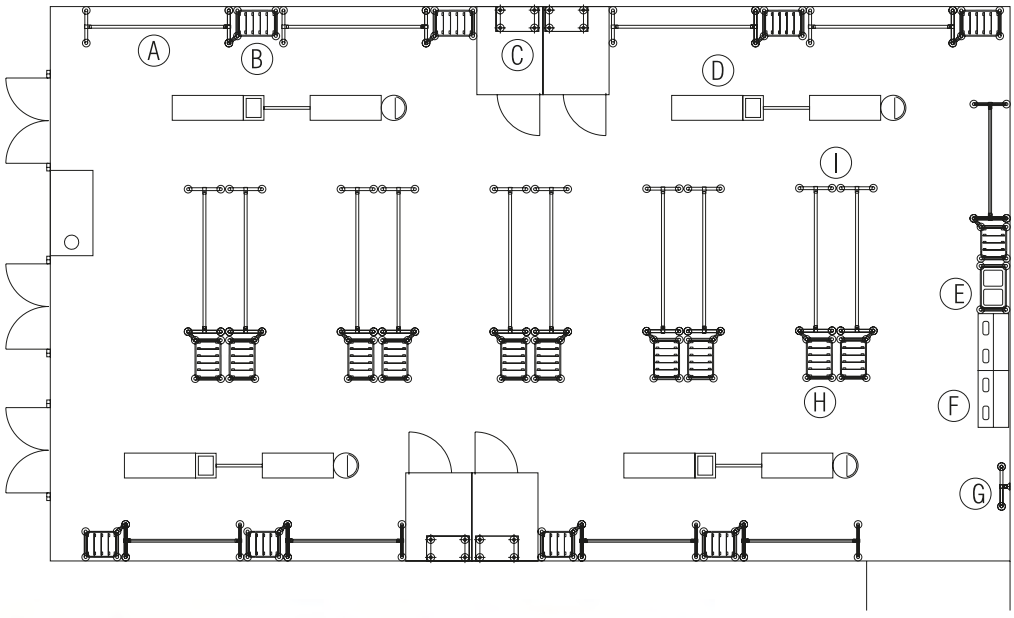

PALBAM CLASS offers the following special services:
1. Custom Engineering & Design for Non Catalog products
2. Project Management

CONTACT US TODAY

ACCESSORIES Feet, Covers & Wheels

Feet

Product	Description	Cat. No.
30 mm Leveling Foot	Included as standard on all ergo tables	AF0300-010
40 mm Leveling Foot		AF0400-010

Product	Description	Cat. No.
95 mm Leveling Plate	Included as standard on all heavy duty tables & Gowning Furniture	AF0012-100

Product	Description	Cat. No.
“Duck Foot” Leveling Plate	Can be bolted to the floor	AF0055

Covers

Product	Description	Cat. No.
Cover for 30 mm leveling foot	Smooth polymer cover fits over leveling foot to protect floors	AF0130
Cover for 40 mm leveling foot	Smooth polymer cover fits over leveling foot to protect floors	AF0140
Cover for 95 mm leveling Plate		AF0150

Product	Description	Cat. No.
Stainless Steel Cover for 95 mm leveling Plate	Decoratively covers the leveling plate and bolt connections to the floor. Included as standard on heavy duty tables & Gowning Furniture.	AF0040-001

Wheels

Product	Description	Cat. No.
5 inch white Nylon wheel	Heavy Duty swivel type non marking cleanroom wheel	AW2001-100
5 inch white Nylon wheel + brake	Heavy Duty swivel type non marking cleanroom wheel	AW2001-200

Product	Description	Cat. No.
5 inch grey ESD wheel	Heavy Duty swivel type Grey ESD cleanroom wheel	AW2002-100
5 inch grey ESD wheel + brake	Heavy Duty swivel type Grey ESD cleanroom wheel	AW2002-200

DISPENSERS

Unique Stainless Steel Solutions

DISPOSABLES DISPENSERS

Features

- Uniquely designed for Cleanrooms / Critical Environments
- For Storing & Dispensing:
- Gloves
- Hairnets
- Face Masks
- Shoe Covers
- Rounded openings allowing "snag-free" pull-out
- "First In - First Out" principal
- Top lid for easy refilling
- Trap bin catches loose items
- Viewing slots to gauge content levels
- Wall mounted
- Fabrication Material: Stainless Steel 304L with Electro-Polished Finish

Benefits

- **Longer life span compared to acrylic dispensers**
- **Resistant to constant wipe-down**
- **Non flammable**
- **Non contaminating**
- **Non accumulating**

Product	LxWxH (mm)	LxWxH (")	Cat. No.
Dispenser 1 compartment	200x205x600	8x8x24	**GD-2060**
Dispenser 2 compartments	400x205x600	16x8x24	**GD-4060**
Dispenser 3 compartments	600x205x600	24x8x24	**GD-6060**
Dispenser 4 compartments	800x205x600	32x8x24	**GD-8060**

Product	LxWxH (mm)	LxWxH (")	Cat. No.
Dispenser 2 compartments - Long	400x220x1000	16x8.6x40	**GD-8540**

STERILE GLOVE DISPENSERS

These dispensers are designed for dispensing packaged sterile gloves.
A slot the vertical length of each chamber and a top lid, allows for easy refilling of the gloves.
Wall mounted.
Fabrication Material: 304 stainless steel, electropolished.

Product	LxWxH (mm)	LxWxH (")	Cat. No.
Sterile Glove Dispenser 2 compartments	620x185x610	24.5x7.5x24	GDS-0605
(suitable for glove package size 11"x6")			

Product	LxWxH (mm)	LxWxH (")	Cat. No.
Sterile Glove Dispenser 3 compartments	870x180x600	34.3x7x24	GDS-8760
(suitable for glove package size 11"x6")			

Product	LxWxH (mm)	LxWxH (")	Cat. No.
Sterile Glove Dispenser 4 compartments	680x200x600	27x8x24	GDS-6860
(suitable for glove package size 7"x6")			
Sterile Glove Dispenser 4 compartments	854x191x600	33.5x7.5x24	GDS-0807
(suitable for glove package size 8"x7")			

GLOVE BOX DISPENSER

Holds 3 Glove boxes, each slot 280x75x140mm approx 11x3x5.5".
Custom sizes possible.
Fabrication materials: stainless steel 304 with electro-polished finish

Product	LxWxH (mm)	LxWxH (")	Cat. No.
Glove Box Dispenser	280x78x426	11x3x16.75	GD0208

GOWN & HOOD DISPENSERS

Folded Gown Dispenser
Can be easily modified to your specifications / gown sizes.
Wall Mounted Gown Dispenser.
Fabrication material: stainless steel 304, electropolished.

Product	LxWxH (mm)	LxWxH (")	Cat. No.
Folded Gown Dispenser	350x250x770	14x10x30.3	GD-0301
Folded Gown Dispenser	410x310x750	16x12x30	GD-0404

Gown - Hood Dispenser
This wall mounted dispenser has been designed for plastic wrapped gowns and hoods. Easy refilling and easy retrieval. Designed to prevent spillage of items.
Fabrication material: stainless steel 304, electropolished finish.

Product	LxWxH (mm)	LxWxH (")	Cat. No.
Gown - Hood Dispenser	300x240x800	12x9.5x32	GD-0305

EYE GLASS DISPENSER

Wall mounted Eye Glass Dispenser.
Fabrication materials: stainless steel 304 with electropolished finish & acrylic see through front panel.

Product	LxWxH (mm)	LxWxH (")	Cat. No.
Eye Glass Dispenser	300x200x400	12x8x16	GD-0302

WIPES AND BOTTLE DISPENSER

Wall mounted wipes dispenser with side bottle holders.
Fabrication materials: stainless steel 304 with electropolished finish.

Product	LxWxH (mm)	LxWxH (")	Cat. No.
Wipes Bottle Holder	395x115x310	16x4.5x12	GD-0306
Wipes Holder Only	235x115x310	9.25x4.5x12	GD0207

DISPOSAL CABINET

The Disposal Cabinet complements the glove dispensers. Cabinet features waste throw openings, doors and leveling feet. The cabinet is available with either 1 or 2 doors. Fabrication materials: stainless steel with electropolished finish.

This unit is designed to fit below either: 2 x GD8540 or 1 x GD8060 to provide a complete dispensing / disposal system. Cabinet contains two large plastic bins.

Product	LxWxH (mm)	LxWxH (")	Cat. No.
Disposal cabinet – 2 doors	800x430x900	32x17x36	**GDC-8040**
Disposal cabinet – 1 door	400x430x900	16x17x36	**GDC-4040**
Frame 8040	800x30x1600	32x1x63	**GDC8040-FRAME**
Frame 4040	400x30x1600	16x1x63	**GDC4040-FRAME**

DISPOSAL CABINET FRAME

This frame allows you to install the dispensers above the cabinets with no need to connect them to the wall. Creates a free-stand dispenser and cabinet unit.
Fabrication material: 304 stainless steel, electropolished.

Complete Dispensing / Disposal Unit consists of:

Product	Cat. No.
Dispenser 4	**GD8060**
Frame 8040	**GDC8040-FRAME**
Disposal Cabinet	**GDC-8040**

Heavy Duty Table

Ergo Table

WORK STATIONS

Unique Stainless Steel Solutions

All Palbam Class products are designed and manufactured according to the following guidelines:

- Cleanliness – non-particulating and non-accumulating
- Ergonomic and human factors – industry standards
- Functionality of operation
- Design to cost
- Aesthetics, ensuring a high level of operator satisfaction
- Modularity.

Palbam Class product advantage is found in the small, but so essential, details:

The frames for the workstations are constructed from round tubing and not square profiles. This is essential, in ultra-cleanrooms with laminar airflow, as it reduces air turbulence, as well as being easier to clean and more ergonomically friendly.

Only the best craftsmen manufacture our products. This is easily recognized by examining the excellent welding and finishing quality.

The whole manufacturing process is ISO certified and conforms to the highest industry standards.

CLEANROOM ERGO TABLES

Table showing all accessories

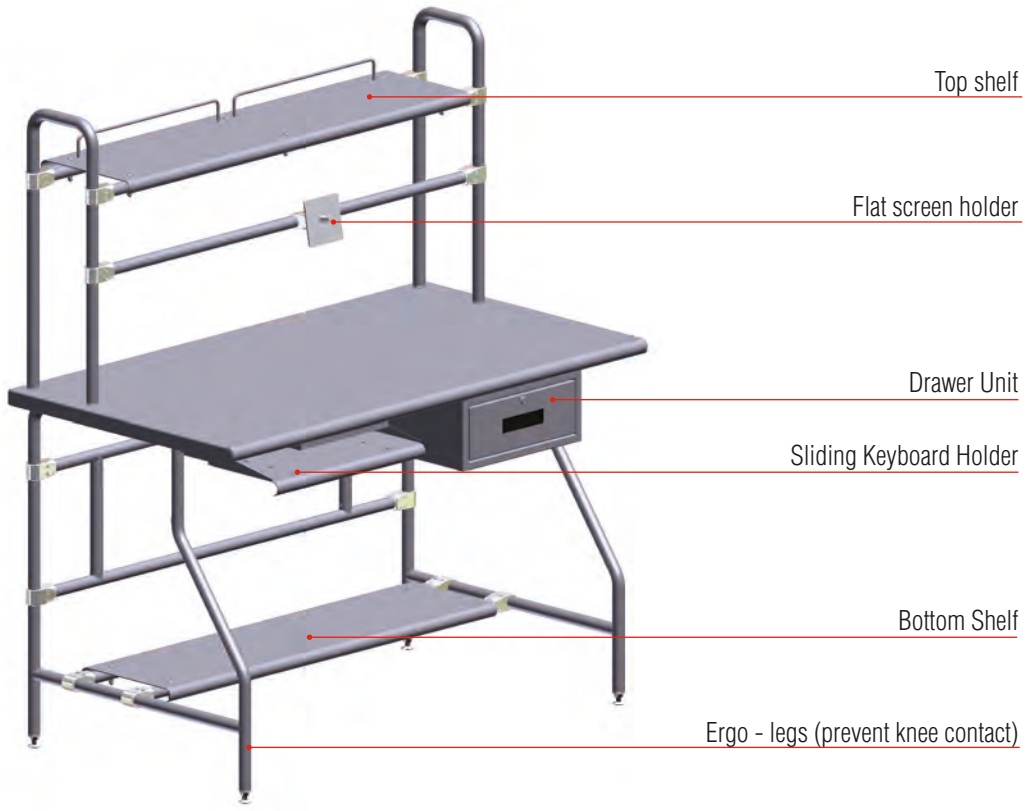

Features:

- Fabrication materials: 304 stainless steel with electropolished finish and Al anodized cleanroom compatible connectors.
- Designed to be shipped “flat packed” - assembly instructions included.
- Assembly time 10 minutes
- Rounded front table tops
- Ergonomic table legs designed to prevent operators “knocking knees” on table
- Height adjustable feet or casters
- All accessories attachable

Benefits

- Excellent design conforms to highest cleanroom specifications
- Economical shipping
- User satisfaction guaranteed

CLEANROOM ERGO TABLES - Solid Top

Palbam Class Cleanroom tables are manufactured to the highest cleanroom standards. The bases are fabricated from tubing for easy cleaning and optimal airflow. The tops are designed to reduce vibrations and are very strong holding up to 80kg.
Palbam Class tables have fixtures enabling all the accessories to be attached at time of purchase or in the future if the need arises.
Accessories include top & bottom shelves, drawer units & keyboard holders & the flat screen holders.

Fabricated from stainless steel 304 with electropolished finish and anodized aluminum connectors.
The tables are shipped flat packed with easy assembly instructions.

Options:
Lengths: 600 - 2000mm
Widths: 600 or 760mm
Heights: 750 or 900mm

Custom sizes are also possible.

We use stainless steel **304L** which is electro-polished. We think this is suitable for most cleanroom requirements. However sometimes customers insist on using sst **316L**. This is possible. You just have to add X after the catalog number.

600mm / 24 inch Width Tables

LxWxH (mm)	Cat. No.	LxWxH (mm)	Cat. No.
900mm Height		**750mm Height**	
600x600x900	**WX0601**	600x600x750	**WX0651**
700x600x900	**WX0701**	700x600x750	**WX0751**
800x600x900	**WX0801**	800x600x750	**WX0851**
900x600x900	**WX0901**	900x600x750	**WX0951**
1000x600x900	**WX1001**	1000x600x750	**WX1051**
1100x600x900	**WX1101**	1100x600x750	**WX1151**
1200x600x900	**WX1201**	1200x600x750	**WX1251**
1300x600x900	**WX1301**	1300x600x750	**WX1351**
1400x600x900	**WX1401**	1400x600x750	**WX1451**
1500x600x900	**WX1501**	1500x600x750	**WX1551**
1600x600x900	**WX1601**	1600x600x750	**WX1651**
1700x600x900	**WX1701**	1700x600x750	**WX1751**
1800x600x900	**WX1801**	1800x600x750	**WX1851**
1900x600x900	**WX1901**	1900x600x750	**WX1951**
2000x600x900	**WX2001**	2000x600x750	**WX2051**

760mm / 30 inch Width Tables

LxWxH (mm)	Cat. No.	LxWxH (mm)	Cat. No.
900mm Height		**750mm Height**	
600x760x900	**WX0602**	600x760x750	**WX0652**
700x760x900	**WX0702**	700x760x750	**WX0752**
800x760x900	**WX0802**	800x760x750	**WX0852**
900x760x900	**WX0902**	900x760x750	**WX0952**
1000x760x900	**WX1002**	1000x760x750	**WX1052**
1100x760x900	**WX1102**	1100x760x750	**WX1152**
1200x760x900	**WX1202**	1200x760x750	**WX1252**
1300x760x900	**WX1302**	1300x760x750	**WX1352**
1400x760x900	**WX1402**	1400x760x750	**WX1452**
1500x760x900	**WX1502**	1500x760x750	**WX1552**
1600x760x900	**WX1602**	1600x760x750	**WX1652**
1700x760x900	**WX1702**	1700x760x750	**WX1752**
1800x760x900	**WX1802**	1800x760x750	**WX1852**
1900x760x900	**WX1902**	1900x760x750	**WX1952**
2000x760x900	**WX2002**	2000x760x750	**WX2052**

CLEANROOM ERGO TABLES - Perforated Top

Palbam Class Cleanroom tables are manufactured to the highest cleanroom standards. The bases are fabricated from tubing for easy cleaning and optimal airflow. The tops are designed to reduce vibrations and are very strong holding up to 80kg.
Palbam Class tables have fixtures enabling all the accessories to be attached at time of purchase or in the future if the need arises.
Accessories include top & bottom shelves, drawer units & keyboard holders & the flat screen holders.

Fabricated from stainless steel 304 with electropolished finish and anodized aluminum connectors.
The tables are shipped flat packed with easy assembly instructions.

Options:
Lengths: 600 - 2000mm
Widths: 600 or 760mm
Heights: 750 or 900mm

Custom sizes are also possible.

We use stainless steel **304L** which is electro-polished. We think this is suitable for most cleanroom requirements. However sometimes customers insist on using sst **316L**. This is possible. You just have to add X after the catalog number.

600mm / 24 inch Width Tables

LxWxH (mm)	Cat. No.	LxWxH (mm)	Cat. No.
900mm Height		**750mm Height**	
600x600x900	**WX0603**	600x600x750	**WX0653**
700x600x900	**WX0703**	700x600x750	**WX0753**
800x600x900	**WX0803**	800x600x750	**WX0853**
900x600x900	**WX0903**	900x600x750	**WX0953**
1000x600x900	**WX1003**	1000x600x750	**WX1053**
1100x600x900	**WX1103**	1100x600x750	**WX1153**
1200x600x900	**WX1203**	1200x600x750	**WX1253**
1300x600x900	**WX1303**	1300x600x750	**WX1353**
1400x600x900	**WX1403**	1400x600x750	**WX1453**
1500x600x900	**WX1503**	1500x600x750	**WX1553**
1600x600x900	**WX1603**	1600x600x750	**WX1653**
1700x600x900	**WX1703**	1700x600x750	**WX1753**
1800x600x900	**WX1803**	1800x600x750	**WX1853**
1900x600x900	**WX1903**	1900x600x750	**WX1953**
2000x600x900	**WX2003**	2000x600x750	**WX2053**

760mm / 30 inch Width Tables

LxWxH (mm)	Cat. No.	LxWxH (mm)	Cat. No.
900mm Height		**750mm Height**	
600x760x900	**WX0604**	600x760x750	**WX0654**
700x760x900	**WX0704**	700x760x750	**WX0754**
800x760x900	**WX0804**	800x760x750	**WX0854**
900x760x900	**WX0904**	900x760x750	**WX0954**
1000x760x900	**WX1004**	1000x760x750	**WX1054**
1100x760x900	**WX1104**	1100x760x750	**WX1154**
1200x760x900	**WX1204**	1200x760x750	**WX1254**
1300x760x900	**WX1304**	1300x760x750	**WX1354**
1400x760x900	**WX1404**	1400x760x750	**WX1454**
1500x760x900	**WX1504**	1500x760x750	**WX1554**
1600x760x900	**WX1604**	1600x760x750	**WX1654**
1700x760x900	**WX1704**	1700x760x750	**WX1754**
1800x760x900	**WX1804**	1800x760x750	**WX1854**
1900x760x900	**WX1904**	1900x760x750	**WX1954**
2000x760x900	**WX2004**	2000x760x750	**WX2054**

CLEANROOM ERGO TABLES - Rod Top

Palbam Class Cleanroom tables are manufactured to the highest cleanroom standards. The bases are fabricated from tubing for easy cleaning and optimal airflow. The tops are designed to reduce vibrations and are very strong holding up to 80kg.
Palbam Class tables have fixtures enabling all the accessories to be attached at time of purchase or in the future if the need arises.
Accessories include top & bottom shelves, drawer units & keyboard holders & the flat screen holders.

Fabricated from stainless steel 304 with electropolished finish and anodized aluminum connectors.
The tables are shipped flat packed with easy assembly instructions.

Options:
Lengths: 600 - 2000mm
Widths: 600 or 760mm
Heights: 750 or 900mm

Custom sizes are also possible.

We use stainless steel **304L** which is electro-polished. We think this is suitable for most cleanroom requirements. However sometimes customers insist on using sst **316L**. This is possible. You just have to add X after the catalog number.

600mm / 24 inch Width Tables

LxWxH (mm)	Cat. No.	LxWxH (mm)	Cat. No.
900mm Height		**750mm Height**	
600x600x900	**WX0605**	600x600x750	**WX0655**
700x600x900	**WX0705**	700x600x750	**WX0755**
800x600x900	**WX0805**	800x600x750	**WX0855**
900x600x900	**WX0905**	900x600x750	**WX0955**
1000x600x900	**WX1005**	1000x600x750	**WX1055**
1100x600x900	**WX1105**	1100x600x750	**WX1155**
1200x600x900	**WX1205**	1200x600x750	**WX1255**
1300x600x900	**WX1305**	1300x600x750	**WX1355**
1400x600x900	**WX1405**	1400x600x750	**WX1455**
1500x600x900	**WX1505**	1500x600x750	**WX1555**
1600x600x900	**WX1605**	1600x600x750	**WX1655**
1700x600x900	**WX1705**	1700x600x750	**WX1755**
1800x600x900	**WX1805**	1800x600x750	**WX1855**
1900x600x900	**WX1905**	1900x600x750	**WX1955**
2000x600x900	**WX2005**	2000x600x750	**WX2055**

760mm / 30 inch Width Tables

LxWxH (mm)	Cat. No.	LxWxH (mm)	Cat. No.
900mm Height		**750mm Height**	
600x760x900	**WX0606**	600x760x750	**WX0656**
700x760x900	**WX0706**	700x760x750	**WX0756**
800x760x900	**WX0806**	800x760x750	**WX0856**
900x760x900	**WX0906**	900x760x750	**WX0956**
1000x760x900	**WX1006**	1000x760x750	**WX1056**
1100x760x900	**WX1106**	1100x760x750	**WX1156**
1200x760x900	**WX1206**	1200x760x750	**WX1256**
1300x760x900	**WX1306**	1300x760x750	**WX1356**
1400x760x900	**WX1406**	1400x760x750	**WX1456**
1500x760x900	**WX1506**	1500x760x750	**WX1556**
1600x760x900	**WX1606**	1600x760x750	**WX1656**
1700x760x900	**WX1706**	1700x760x750	**WX1756**
1800x760x900	**WX1806**	1800x760x750	**WX1856**
1900x760x900	**WX1906**	1900x760x750	**WX1956**
2000x760x900	**WX2006**	2000x760x750	**WX2056**

CLEANROOM TABLE - Top Shelves

Width 300mm Height 700mm
Shelves Easily Attachable.
Order shelf length which matches table length.
Screw connection to table top.
Includes shelf and upright supports.

Optional:
Solid, perforated or rod

Table Length mm	Cat. No. solid	Cat. No. perforated	Cat. No. Rod
600	WX0617	WX0618	WX0613
700	WX0717	WX0718	WX0713
800	WX0817	WX0818	WX0813
900	WX0917	WX0918	WX0913
1000	WX1017	WX1018	WX1013
1100	WX1117	WX1118	WX1113
1200	WX1217	WX1218	WX1213
1300	WX1317	WX1318	WX1313
1400	WX1417	WX1418	WX1413
1500	WX1517	WX1518	WX1513
1600	WX1617	WX1618	WX1613
1700	WX1717	WX1718	WX1713
1800	WX1817	WX1818	WX1813
1900	WX1917	WX1918	WX1913
2000	WX2017	WX2018	WX2013

CLEANROOM ERGO TABLE - Bottom Shelves

Width 300mm Height N/A
Shelves Easily Attachable.
Order shelf length which matches table length.

Optional:
Solid, perforated or rod

Table Length mm	Cat. No. solid	Cat. No. perforated	Cat. No. Rod
600	WX0614	WX0615	WX0616
700	WX0714	WX0715	WX0716
800	WX0814	WX0815	WX0816
900	WX0914	WX0915	WX0916
1000	WX1014	WX1015	WX1016
1100	WX1114	WX1115	WX1116
1200	WX1214	WX1215	WX1216
1300	WX1314	WX1315	WX1316
1400	WX1414	WX1415	WX1416
1500	WX1514	WX1515	WX1516
1600	WX1614	WX1615	WX1616
1700	WX1714	WX1715	WX1716
1800	WX1814	WX1815	WX1816
1900	WX1914	WX1915	WX1916
2000	WX2014	WX2015	WX2016

CLEANROOM HEAVY DUTY TABLE

• The Cleanroom Heavy Duty Table is designed for more robust and heavy duty activities.
• This sturdy workstation is available with either solid or perforated tops together with all the accessories.
• Table is designed to be delivered **Flat Packed**.
• Assembly instructions included.
• Assembly time 10 minutes.
• Fabrication material : 304 stainless steel, electropolished.
• Standard tables include adjustable feet. If you require casters instead of feet, simply write CASTORS - after the catalog #.
• 316 stainless steel available upon request.

• Palbam Class tables are designed for comfortable use. The standard 900mm/35.4 inch height allows work to be performed standing or sitting, and allows the comfortable attachment of all undershelf accessories.
• 750 mm height also available.

• To order tables outside of standard dimensions, contact us for details.

We use stainless steel **304L** which is electro-polished. We think this is suitable for most cleanroom requirements. However sometimes customers insist on using sst **316L**. This is possible. You just have to add X after the catalog number.

CLEANROOM HEAVY DUTY TABLE - Solid Top

Palbam Class Cleanroom tables are manufactured to the highest cleanroom standards. The bases are fabricated from tubing for easy cleaning and optimal airflow. The tops are designed to reduce vibrations and are very strong holding up to 100kg.
Palbam Class tables have fixtures enabling all the accessories to be attached at time of purchase or in the future if the need arises. Accessories include top & bottom shelves, drawer units & keyboard holders & the flat screen holders.

Fabricated from stainless steel 304 with electropolished finish and anodized aluminum connectors. The tables are shipped flat packed with easy assembly instructions.

Options:
Lengths: 600 - 2000mm
Widths: 600 or 760mm
Heights: 750 or 900mm

Custom sizes are also possible.

We use stainless steel **304L** which is electro-polished. We think this is suitable for most cleanroom requirements. However sometimes customers insist on using sst **316L**. This is possible. You just have to add X after the catalog number.

To add 5" cleanroom casters to the tables add C after the catalog number.

We recommend adding casters to the 750mm / 30" height tables as this brings the table height to almost 900mm / 36"

600mm / 24 inch Width Tables

LxWxH (mm)	Cat. No.	LxWxH (mm)	Cat. No.
900mm Height		**750mm Height**	
600x600x900	**WX0607**	600x600x750	**WX0657**
700x600x900	**WX0707**	700x600x750	**WX0757**
800x600x900	**WX0807**	800x600x750	**WX0857**
900x600x900	**WX0907**	900x600x750	**WX0957**
1000x600x900	**WX1007**	1000x600x750	**WX1057**
1100x600x900	**WX1107**	1100x600x750	**WX1157**
1200x600x900	**WX1207**	1200x600x750	**WX1257**
1300x600x900	**WX1307**	1300x600x750	**WX1357**
1400x600x900	**WX1407**	1400x600x750	**WX1457**
1500x600x900	**WX1507**	1500x600x750	**WX1557**
1600x600x900	**WX1607**	1600x600x750	**WX1657**
1700x600x900	**WX1707**	1700x600x750	**WX1757**
1800x600x900	**WX1807**	1800x600x750	**WX1857**
1900x600x900	**WX1907**	1900x600x750	**WX1957**
2000x600x900	**WX2007**	2000x600x750	**WX2057**

760mm / 30 inch Width Tables

LxWxH (mm)	Cat. No.	LxWxH (mm)	Cat. No.
900mm Height		**750mm Height**	
600x760x900	**WX0608**	600x760x750	**WX0658**
700x760x900	**WX0708**	700x760x750	**WX0758**
800x760x900	**WX0808**	800x760x750	**WX0858**
900x760x900	**WX0908**	900x760x750	**WX0958**
1000x760x900	**WX1008**	1000x760x750	**WX1058**
1100x760x900	**WX1108**	1100x760x750	**WX1158**
1200x760x900	**WX1208**	1200x760x750	**WX1258**
1300x760x900	**WX1308**	1300x760x750	**WX1358**
1400x760x900	**WX1408**	1400x760x750	**WX1458**
1500x760x900	**WX1508**	1500x760x750	**WX1558**
1600x760x900	**WX1608**	1600x760x750	**WX1658**
1700x760x900	**WX1708**	1700x760x750	**WX1758**
1800x760x900	**WX1808**	1800x760x750	**WX1858**
1900x760x900	**WX1908**	1900x760x750	**WX1958**
2000x760x900	**WX2008**	2000x760x750	**WX2058**

CLEANROOM HEAVY DUTY TABLE - Perforated Top

Palbam Class Cleanroom tables are manufactured to the highest cleanroom standards. The bases are fabricated from tubing for easy cleaning and optimal airflow. The tops are designed to reduce vibrations and are very strong holding up to 100kg.
Palbam Class tables have fixtures enabling all the accessories to be attached at time of purchase or in the future if the need arises. Accessories include top & bottom shelves, drawer units & keyboard holders & the flat screen holders.

Fabricated from stainless steel 304 with electropolished finish and anodized aluminum connectors. The tables are shipped flat packed with easy assembly instructions.

Options:
Lengths: 600 - 2000mm
Widths: 600 or 760mm
Heights: 750 or 900mm

Custom sizes are also possible.

We use stainless steel **304L** which is electro-polished. We think this is suitable for most cleanroom requirements. However sometimes customers insist on using sst **316L**. This is possible. You just have to add X after the catalog number.

To add 5" cleanroom casters to the tables add C after the catalog number.

We recommend adding casters to the 750mm / 30" height tables as this brings the table height to almost 900mm / 36"

600mm / 24 inch Width Tables

LxWxH (mm)	Cat. No.	LxWxH (mm)	Cat. No.
900mm Height		**750mm Height**	
600x600x900	**WX0609**	600x600x750	**WX0659**
700x600x900	**WX0709**	700x600x750	**WX0759**
800x600x900	**WX0809**	800x600x750	**WX0859**
900x600x900	**WX0909**	900x600x750	**WX0959**
1000x600x900	**WX1009**	1000x600x750	**WX1059**
1100x600x900	**WX1109**	1100x600x750	**WX1159**
1200x600x900	**WX1209**	1200x600x750	**WX1259**
1300x600x900	**WX1309**	1300x600x750	**WX1359**
1400x600x900	**WX1409**	1400x600x750	**WX1459**
1500x600x900	**WX1509**	1500x600x750	**WX1559**
1600x600x900	**WX1609**	1600x600x750	**WX1659**
1700x600x900	**WX1709**	1700x600x750	**WX1759**
1800x600x900	**WX1809**	1800x600x750	**WX1859**
1900x600x900	**WX1909**	1900x600x750	**WX1959**
2000x600x900	**WX2009**	2000x600x750	**WX2059**

760mm / 30 inch Width Tables

LxWxH (mm)	Cat. No.	LxWxH (mm)	Cat. No.
900mm Height		**750mm Height**	
600x760x900	**WX0610**	600x760x750	**WX0660**
700x760x900	**WX0710**	700x760x750	**WX0760**
800x760x900	**WX0810**	800x760x750	**WX0860**
900x760x900	**WX0910**	900x760x750	**WX0960**
1000x760x900	**WX1010**	1000x760x750	**WX1060**
1100x760x900	**WX1110**	1100x760x750	**WX1160**
1200x760x900	**WX1210**	1200x760x750	**WX1260**
1300x760x900	**WX1310**	1300x760x750	**WX1360**
1400x760x900	**WX1410**	1400x760x750	**WX1460**
1500x760x900	**WX1510**	1500x760x750	**WX1560**
1600x760x900	**WX1610**	1600x760x750	**WX1660**
1700x760x900	**WX1710**	1700x760x750	**WX1760**
1800x760x900	**WX1810**	1800x760x750	**WX1860**
1900x760x900	**WX1910**	1900x760x750	**WX1960**
2000x760x900	**WX2010**	2000x760x750	**WX2060**

CLEANROOM TABLE - Top Shelves

Width 300mm Height 700mm
Shelves Easily Attachable.
Order shelf length which matches table length.
Screw connection to table top.
Includes shelf and upright supports.

Optional:
Solid, perforated.

Table Length mm	Cat. No. solid	Cat. No. perforated
600	WX0617	WX0618
700	WX0717	WX0718
800	WX0817	WX0818
900	WX0917	WX0918
1000	WX1017	WX1018
1100	WX1117	WX1118
1200	WX1217	WX1218
1300	WX1317	WX1318
1400	WX1417	WX1418
1500	WX1517	WX1518
1600	WX1617	WX1618
1700	WX1717	WX1718
1800	WX1817	WX1818
1900	WX1917	WX1918
2000	WX2017	WX2018

CLEANROOM HEAVY DUTY - Bottom Shelves

Width 300mm Height N/A
Shelves Easily Attachable.
Order shelf length which matches table length.

Optional:
Solid, perforated.

Table Length mm	Cat. No. solid	Cat. No. perforated
600	WX0619	WX0620
700	WX0719	WX0720
800	WX0819	WX0820
900	WX0919	WX0920
1000	WX1019	WX1020
1100	WX1119	WX1120
1200	WX1219	WX1220
1300	WX1319	WX1320
1400	WX1419	WX1420
1500	WX1519	WX1520
1600	WX1619	WX1620
1700	WX1719	WX1720
1800	WX1819	WX1820
1900	WX1919	WX1920
2000	WX2019	WX2020

WORKSTATION ACCESSORIES

Drawer Unit
Our modular, heavy duty, drawer unit can be attached by bolts to any of our tables. Wide tables can accommodate even two sets of 3 drawers. The drawers are fully extendable and the top drawer has a lock.
Drawer 1 & 3 as shown.
Drawer 2 has top drawer with lock and bottom drawer double size (file type).

Fabrication material:304 stainless steel, electropolish.

Product	LxWxH (mm)	LxWxH (")	Cat. No.
Drawer Unit 1	400x440x200	16x17.5x8	DRAWER-1
Drawer Unit 2	400x440x460	16x17.5x18	DRAWER-2
Drawer Unit 3	400x440x460	16x17.5x18	DRAWER-3

Sliding Keyboard Shelf
Attachable to all Palbam Class workstations

Product	LxWxH (mm)	LxWxH (")	Cat. No.
Sliding Keyboard Shelf	500x463x112	20x18x4.5	KYBD-A

Flat Screen Holder
Product: Flat Screen Holder System
Includes vertical posts and horizontal bar and one VESA screen connector.
Order according to table length.

Product	Table Length (mm)	LxWxH (")	Cat. No.
Flat Screen Holder	600		WX0621
Flat Screen Holder	700		WX0721
Flat Screen Holder	800		WX0821
Flat Screen Holder	900		WX0921
Flat Screen Holder	1000		WX1021
Flat Screen Holder	1100		WX1121
Flat Screen Holder	1200		WX1221
Flat Screen Holder	1300		WX1321
Flat Screen Holder	1400		WX1421
Flat Screen Holder	1500		WX1521
Flat Screen Holder	1600		WX1621
Flat Screen Holder	1700		WX1721
Flat Screen Holder	1800		WX1821
Flat Screen Holder	1900		WX1921
Flat Screen Holder	2000		WX2021

Extra VESA connector
Extra VESA connectors that can be connected to flat screen holders

Product	LxWxH (mm)	LxWxH (")	Cat. No.
Extra VESA connector	113x113x100	4.5x4.5x4	WX-VESA

CUSTOM TABLES

Palbam Class appreciates that not all customer demands can be met by the standard designs alone. If you have special, custom demands, let Palbam Class design your workstations.

Free Stand Baby
This ergonomic free-stand "baby" workstation is designed for tight spots. Modular perforated, rod or solid type top. Easily fits into small areas, turning even "impossible" layouts into workspaces. Adjustable feet as standard. Fabrication material: 304 stainless steel, electropolished.

Product	LxWxH (mm)	LxWxH (")	Cat. No.
Free Stand Baby - Perforated Top	600x300x900	24x12x36	**PBT06030-P**
Free Stand Baby - Perforated Top	700x300x900	28x12x36	**PBT07030-P**
Free Stand Baby - Perforated Top	800x300x900	32x12x36	**PBT08030-P**
Free Stand Baby - Perforated Top	900x300x900	36x12x36	**PBT09030-P**
Free Stand Baby - Perforated Top	1000x300x900	40x12x36	**PBT10030-P**

CLEANROOM HEIGHT ADJUSTABLE WORKSTATIONS

The cleanroom height adjustable workstation is designed with motorized lifters to allow the operator to quickly change the height of the table to ensure a comfortable, ergonomic work environment. Table top and leveler base are manufactured from stainless steel 304 with electro-polished finish. The adjustable legs are manufactured from anodized aluminum. Height adjustability is controlled from easy to use front mounted control unit. Table height can be adjusted from 760 - 1147mm / 30 - 45". Custom dimensions are possible.

These tables are designed for 220V.
For USA customers using 110V just write U after the catalog #.
Example: WU1401U

Product	LxWxH (mm)	LxWxH (")	Cat. No.
Cleanroom Height Adjustable Workstation	1000x600x767-1147	40x24x30-45	**WU1001**
Cleanroom Height Adjustable Workstation	1200x600x767- 1147	48x24x30- 45	**WU1201**
Cleanroom Height Adjustable Workstation	1400x600x767-1147	55x24x30-45	**WU1401**

Highest position

Lowest position

LAPTOP & FLAT SCREEN WORKSTATIONS

The Laptop Workstation offers a mobile, minimum footprint, stable work platform for working with laptops within the Cleanroom.
Fabrication material: Stainless steel 304, electropolished finish.
Can be custom fabricated to fit your laptop dimensions.
Laptop Securing Device also available.

Product	LxWxH (mm)	LxWxH (")	Cat. No.
Laptop Station on casters	500x500x1000	20x20x40	WP0501
Laptop Station on casters	500x500x800	20x20x32	WP0504

The Flat screen, keyboard, mouse workstations with PC Holders are available on leveller legs or casters. The vertical stand has holes strategically placed to allow the cables to be threaded inside the stand.

PC Holders customised to your specifications.

Product	LxWxH (mm)	LxWxH (")	Cat. No.
Flat Screen, Keyboard, Mouse station + PC Holder on leveller legs	559x533x1600	22x21x64	WP0503F
Flat Screen, Keyboard, Mouse station + PC Holder on casters	559x533x1600	22x21x64	WP0503

WALL MOUNT SWING ARM KEYBOARD HOLDER

This wall mount keyboard holder is ideal for mounting on machine or wall next to screens.

Product	LxWxH (mm)	LxWxH (")	Cat. No.
Wall Mount Swing Arm Keyboard Holder	915x298x77	36x12x3	WP0901

WEIGHING TABLES

Granite Top weighing tables permit stable reduced vibration solution where sensitive measurements are required.

Product	LxWxH (mm)	LxWxH (")	Cat. No.
Weighing Tables	1200x600x730	48x24x29	WC0011

CLEANROOM SINK UNITS

CLEANROOM SINK UNITS

Cleanroom Sink
This sink unit has the advantage of being:
Knock-down design - all parts connected by screws and connecters so allowing compact shipping.
Modular - drawers and shelves can be added according to requirement.
Fabrication material: 304 or 316 stainless steel, electropolished.

Product	LxWxH (mm)	LxWxH (")	Cat. No.
Table Sink (Sink 400x550mm)	1000x700x900		TS-1070
Table Sink (Sink 400x550mm)	1100x700x900		TS-1170
Table Sink (Sink 400x550mm)	1200x700x900		TS-1270
Table Sink (Sink 400x550mm)	1300x700x900		TS-1370
Table Sink (Sink 400x550mm)	1400x700x900		TS-1470
Table Sink (Sink 400x550mm)	1500x700x900		TS-1570
Table Sink (Sink 400x550mm)	1600x700x900		TS-1670
Table Sink (Sink 400x550mm)	1700x700x900		TS-1770
Table Sink (Sink 400x550mm)	1800x700x900		TS-1870
Table Sink (Sink 400x550mm)	1900x700x900		TS-1970
Table Sink (Sink 400x550mm)	2000x700x900		TS-2070

CLEANROOM SINK UNITS

Cleanroom Sink with backsplash
This sink unit has the advantage of being:
Knock-down design - all parts connected by screws and connecters so allowing compact shipping.
Modular - drawers and shelves can be added according to requirement.
Fabrication material: 304 or 316 stainless steel, electropolished.

Product	LxWxH (mm)	LxWxH (")	Cat. No.
Table Sink (Sink 400x550mm) backsplash	1000x700x900		TS-1070-B
Table Sink (Sink 400x550mm) backsplash	1100x700x900		TS-1170-B
Table Sink (Sink 400x550mm) backsplash	1200x700x900		TS-1270-B
Table Sink (Sink 400x550mm) backsplash	1300x700x900		TS-1370-B
Table Sink (Sink 400x550mm) backsplash	1400x700x900		TS-1470-B
Table Sink (Sink 400x550mm) backsplash	1500x700x900		TS-1570-B
Table Sink (Sink 400x550mm) backsplash	1600x700x900		TS-1670-B
Table Sink (Sink 400x550mm) backsplash	1700x700x900		TS-1770-B
Table Sink (Sink 400x550mm) backsplash	1800x700x900		TS-1870-B
Table Sink (Sink 400x550mm) backsplash	1900x700x900		TS-1970-B
Table Sink (Sink 400x550mm) backsplash	2000x700x900		TS-2070-B

STORAGE

Unique Stainless Steel Solutions

Storage Cabinets

Storage Shelves

Storage Racks

All Palbam Class cleanroom cabinets have been specially designed to be either shipped flat packed and assembled by customer or shipped assembled. The choice is yours.
Assembly Instructions are included with all cabinets.
Assembly is quick and easy requiring no special tools or expertise.
Fabrication materials: stainless steel 304 with electropolished finish.

FULL LENGTH CABINETS - 2 DOORS

Cleanroom Full Length Storage Cabinets with 2 swing doors. All shelves are removable. Available with either leveler legs or cleanroom casters. Sloping roof is standard. Fabrication material stainless steel 304 with electropolished finish.
In stock for immediate shipping.

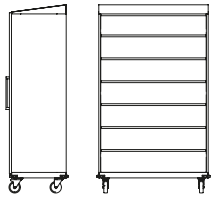

Why do we recommend shipping cabinets flat packed?
- Reduces Shipping Costs
- Reduces likelihood of damage occurring during transport & storage
- Interchangeable parts – allows for future alterations if required

Shipped flat packed

Product	LxWxH (mm)	LxWxH (")	Cat. No.
Full length Cabinet 2 doors 6 shelves on leveller legs	1200x600x2100	48x24x83	**JF1260**
Full length Cabinet 2 doors 6 shelves on casters	1200x600x2100	48x24x83	**JF1260C**

To ship assembled add – AS after catalog #

FULL LENGTH CABINETS - 4 DOORS

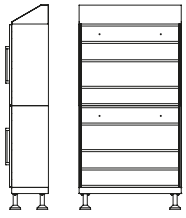

Shipped flat packed

Product	LxWxH (mm)	LxWxH (")	Cat. No.
Full length Cabinet 4 doors 6 shelves	1000x380x2000	40x15x79	**Q1001**
Full length Cabinet 4 doors 6 shelves	1200x450x2000	48x18x79	**Q1002**

To ship assembled add – AS after catalog #

FULL LENGTH CABINET - 2 DOORS

Cleanroom Full Length storage cabinets with 2 swing doors. All shelves are removable. Available with either leveller legs or on casters. Sloping roof is standard. Fabrication material stainless steel 304 with electropolished finish.

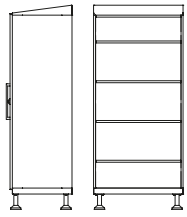

Why do we recommend shipping cabinets flat packed?

- Reduces Shipping Costs
- Reduces likelihood of damage occurring during transport & storage
- Interchangeable parts – allows for future alterations if required

Shipped flat packed

Product	LxWxH (mm)	LxWxH (")	Cat. No.
Full length Cabinet 2 doors 4 shelves on leveller legs	900x600x2100	36x24x83	**JF0960**
Full length Cabinet 2 doors 4 shelves on casters	900x600x2100	36x24x83	**JF0960C**

To ship assembled add – AS after catalog #

CLEANERS CABINET - 2 DOORS

Designed for storing mops and cleaning materials.
Fabrication material stainless steel 304 with electropolished finish.

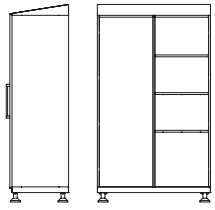

Shipped flat packed

Product	LxWxH (mm)	LxWxH (")	Cat. No.
Cleaners Cabinet on leveller legs	1200x600x1800	48x24x72	**JC1260**
Cleaners Cabinet on casters	1200x600x1800	48x24x72	**JC1260C**
Cleaners Cabinet on leveler legs	800x500x1800	32x20x72	**JC0850**
Cleaners Cabinet on casters	800x500x1800	32x20x72	**JC0850C**

To ship assembled add – AS after catalog #

CABINETS WITH GLASS DOORS

New modern design cleanroom cabinets with safety glass doors allowing easy inspection of contents. Fabrication material stainless steel 304 electropolished finish.

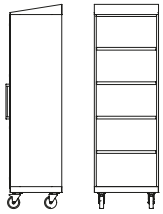

Product	LxWxH (mm)	LxWxH (")	Cat. No.
Full Length Cabinet 2 Glass Doors and 4 shelves on leveller legs	660x600x2100	26x24x83	JG0654
Full Length Cabinet 2 Glass Doors and 4 shelves on casters	660x600x2100	26x24x83	JG0654C
Full Length Cabinet 1 Glass Door and 4 shelves on leveller legs	500x600x2100	20x24x83	JG0554
Full Length Cabinet 1 Glass Door and 4 shelves on casters	500x600x2100	20x24x83	JG0554C

SOILED GARMENT CABINET - 1 DOOR

This cabinet is designed to assist in the degowning and collection of soiled garments for washing. The top flap allows for easy disposal and the door has a latch allowing easy emptying by cleaning contractor. Fabrication material stainless steel 304 electropolished finish.

Shipped flat packed

Product	LxWxH (mm)	LxWxH (")	Cat. No.
Soiled Garment Cabinet - Flat Top	660x540x1950	26x21x77	GC0608
Soiled Garment Cabinet - Sloping Top	660x540x2150	26x21x85	GC0608S

To ship assembled add – AS after catalog #

3/4 HEIGHT CABINETS - 2 DOORS

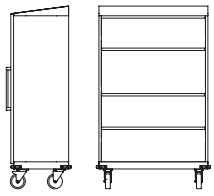

2 Doors and 3 removable shelves

Shipped flat packed

Product	LxWxH (mm)	LxWxH (")	Cat. No.
¾ Height Cabinet on leveller legs	900x500x1500	36x20x59	JE0950
¾ Height Cabinet on casters	900x500x1500	36x20x59	JE0950C

To ship assembled add – AS after catalog #

1/2 HEIGHT CABINETS - 2 DOORS

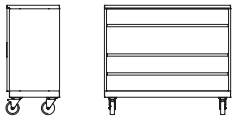

2 Doors and 3 removable shelves

Shipped flat packed

Product	LxWxH (mm)	LxWxH (")	Cat. No.
½ Height Cabinet on leveller legs	1200x523x1040	48x20.5x41	JH1250
½ Height Cabinet on casters	1200x523x1040	48x20.5x41	JH1250C

To ship assembled add – AS after catalog #

LOCKER CABINETS

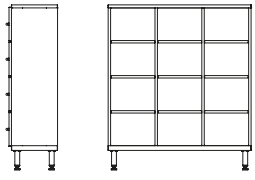

12 compartments for personal item storage

Product	LxWxH (mm)	LxWxH (")	Cat. No.
12 Compartment Cabinet on leveller legs	1178x400x1360	46.5x16x54	SC1111
12 Compartment Cabinet on casters	1178x400x1360	46.5x16x54	SC1111C

4 DRAWER CABINET – UNDER TABLE

This 4 drawer cabinet is available on casters.
Is suitable for placing under tables. One lock locks all drawers.
Fabrication material: stainless steel 304L with electro-polished finish.

Product	LxWxH (mm)	LxWxH (")	Cat. No.
4 Drawer cabinet – under table	400x460x683	16x18x27	QD0402

4 DRAWER CABINET

This 4 drawer cabinet is available on leveler legs.
Fabrication material: stainless steel 304L with electro-polished finish.

Product	LxWxH (mm)	LxWxH (")	Cat. No.
4 Drawer cabinet	600x460x1000	24x18x39.5	QD0601

4 DRAWER FILING CABINET

This 4 drawer cabinet is available on leveler legs.
Fabrication material: stainless steel 304L with electro-polished finish.

Product	LxWxH (mm)	LxWxH (")	Cat. No.
4 Drawer filing cabinet	600x460x1060	24x18x42	QD0602

12 DRAWER CABINET

This 12 drawer cabinet is available on leveler legs or casters with brakes.
Fabrication material: stainless steel 304L with electro-polished finish.

Product	LxWxH (mm)	LxWxH (")	Cat. No.
12 Drawer Cabinet on Leveler Legs	860x460x1354	34x18x53.5	QD0901
12 Drawer Cabinet on Casters	860x460x1354	34x18x53.5	QD0901C

10 DRAWER CABINET

This 10 drawer cabinet is available on leveler legs or casters with brakes.
6 small drawers & 4 Large Drawers
Fabrication material: stainless steel 304L with electro-polished finish.

Product	LxWxH (mm)	LxWxH (")	Cat. No.
10 Drawer Cabinet on Leveler Legs	860x460x1534	34x18x60	QD0902
10 Drawer Cabinet on Casters	860x460x1534	34x18x60	QD0902C

2 DOOR 9 DRAWER CABINET

This 2 Door 9 Drawer Cabinet is available only on leveler legs which must be connected to floor to prevent tipping. Ideal cabinet for storage of range of items.
Inside door section are 3 removable shelves each with 3 removable dividers.
Fabrication material: stainless steel 304L with electro-polished finish.

Product	LxWxH (mm)	LxWxH (")	Cat. No.
2 Door 9 drawer cabinet	908x460x1673	36x18x66	QD0903

WALL MOUNT CABINETS

These unique cabinets have a high quality finish and can be shipped unassembled - “flat - packed”. Assembly easy and quick. Instructions included. Fabrication material: Stainless Steel 304 with Electropolished finish.

Product	LxWxH (mm)	LxWxH (")	Cat. No.
Wall Mount Cabinet - 1 door 3 shelves	460x300x800	18x12x32	**Q4620**
Wall Mount Cabinet - 2 door 6 shelves	920x300x800	36x12x32	**Q4621**

This product has 2 safety glass doors and one removable internal shelf. Fabrication materials: Stainless Steel 304 and electropolished finish and safety glass. Modern Hi-Tech Design

Product	LxWxH (mm)	LxWxH (")	Cat. No.
Wall Mount Cabinet 2 Glass Doors	800x300x600	31.5x12x24	**QW0801**

PASS-THROUGH CABINETS

Pass-throughs for contamination free transfer of materials in and out of the cleanroom. Seamless construction suitable for all cleanroom industries. Manufactured from stainless steel 304L or sst 316L with electro-polished finish. Static dissipative windows.

New Electrical door interlock as standard, allowing only one door to be opened at a time.

Product	LxWxH (mm)	LxWxH (")	Cat. No.
Pass Through	600x400x600	24x16x24	**PT-6060**
Pass Through	700x400x700	28x16x28	**PT-7070**
Pass Through	800x400x800	32x16x32	**PT-8080**

Custom dimensions also manufactured.

High quality welding and finishing for seamless design

GOWNING CABINET - Packaged Items

Cabinet manufactured from stainless steel 304 and electro-polished

Shipped flat packed

Product	LxWxH (mm)	LxWxH (")	Cat. No.
Gowning Cabinet on leveler legs	800x400x2100	32x16x82	**GF0801**
This is a narrow cabinet so only supplied on leveler legs			

To ship assembled add – AS after catalog #

GOWNING CABINET - Gowns & Booties

Cabinet manufactured from stainless steel 304 and electro-polished with safety glass doors

Shipped flat packed

Product	LxWxH (mm)	LxWxH (")	Cat. No.
Gowning Cabinet on leveler legs	1300x500x2100	51x20x82	**JG1350**
Gowning Cabinet on casters	1300x500x2100	51x20x82	**JG1350C**

To ship assembled add – AS after catalog #

PALBAM CLASS - Unique Flat Packed Cleanroom Cabinets

Manufacturing with stainless steel 304 (316 upon request) and with an electro-polished finish the cabinets are of the highest quality suitable for cleanroom usage.
The unique flat packed design allows for the cabinets to be shipped economically and safely to your site. Cabinets are easily assembled and no special tools are required.

The below view of a sample cabinet shows how simply the cabinets are designed and assembled. This special design also allows us to fully electro-polish each part ensuring the highest level of corrosion protection and clean smooth surfaces.

Sample Palbam Class Cleanroom Cabinet Assembly shown below:

- Flat Packed
- Fully electro-polished
- Economical shipping
- Minimizes shipping damage
- Replaceable parts
- Unique to Palbam Class

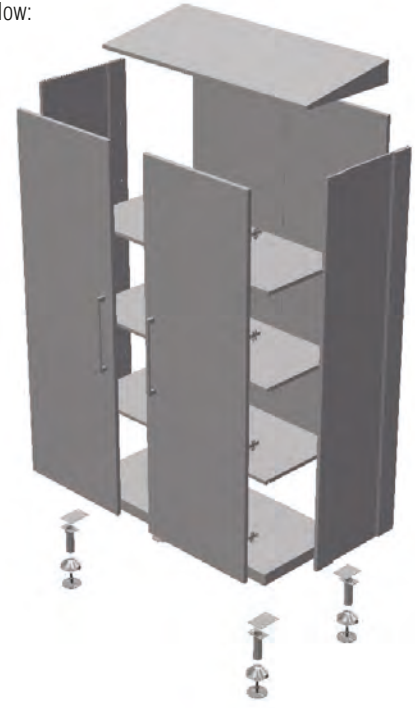

HEPA FILTERED CABINETS

Palbam Class is now offering HEPA filtered cabinets where extra cleanliness is required. For example Gowning Cabinets can now be supplied with a steady flow of HEPA filtered air. Contact us for details.

See page 10 for details

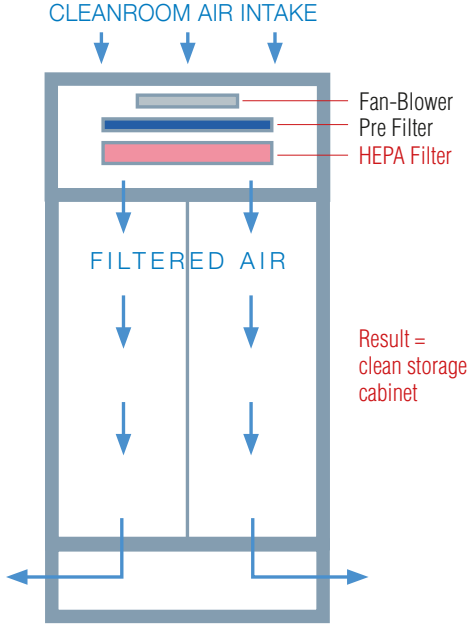

SHELF UNITS - SOLID

Shelf Unit Solid on Legs

Palbam Class offers a high quality range of solid or perforated shelving units fabricated from stainless steel 304 with electropolished finish and Al.anodized conectors.

The units are available on leveler legs or 5 inch diameter cleanroom casters.

The standard unit consists of 4 shelves. Extra shelves can be added.

The shelving is adjustable every 100 mm / 4".

Solid Shelves 400mm Widths / 16" Widths

Product	LxWxH (mm)	LxWxH (")	Cat. No.
4 Solid Shelves Unit - leveler legs	1000x400x1900	40x16x75	**SU-1040-4-S**
4 Solid Shelves Unit - on casters	1000x400x1900	40x16x75	**SU-1040-4-S-Casters**
4 Solid Shelves Unit - leveler legs	1100x400x1900	43x16x75	**SU-1140-4-S**
4 Solid Shelves Unit - on casters	1100x400x1900	43x16x75	**SU-1140-4-S-Casters**
4 Solid Shelves Unit - leveler legs	1200x400x1900	48x16x75	**SU-1240-4-S**
4 Solid Shelves Unit - on casters	1200x400x1900	48x16x75	**SU-1240-4-S-Casters**
4 Solid Shelves Unit - leveler legs	1300x400x1900	51x16x75	**SU-1340-4-S**
4 Solid Shelves Unit - on casters	1300x400x1900	51x16x75	**SU-1340-4-S-Casters**
4 Solid Shelves Unit - leveler legs	1400x400x1900	56x16x75	**SU-1440-4-S**
4 Solid Shelves Unit - on casters	1400x400x1900	56x16x75	**SU-1440-4-S-Casters**
4 Solid Shelves Unit - leveler legs	1500x400x1900	59x16x75	**SU-1540-4-S**
4 Solid Shelves Unit - on casters	1500x400x1900	59x16x75	**SU-1540-4-S-Casters**
4 Solid Shelves Unit - leveler legs	1600x400x1900	63x16x75	**SU-1640-4-S**
4 Solid Shelves Unit - on casters	1600x400x1900	63x16x75	**SU-1640-4-S-Casters**

Shelf Unit Solid on Casters

Solid Shelves 600mm widths / 24" Widths

Product	LxWxH (mm)	LxWxH (")	Cat. No.
4 Solid Shelves Unit - leveler legs	1000x600x1900	40x24x75	**SU-1060-4-S**
4 Solid Shelves Unit - on casters	1000x600x1900	40x24x75	**SU-1060-4-S-Casters**
4 Solid Shelves Unit - leveler legs	1100x600x1900	43x24x75	**SU-1160-4-S**
4 Solid Shelves Unit - on casters	1100x600x1900	43x24x75	**SU-1160-4-S-Casters**
4 Solid Shelves Unit - leveler legs	1200x600x1900	48x24x75	**SU-1260-4-S**
4 Solid Shelves Unit - on casters	1200x600x1900	48x24x75	**SU-1260-4-S-Casters**
4 Solid Shelves Unit - leveler legs	1300x600x1900	51x24x75	**SU-1360-4-S**
4 Solid Shelves Unit - on casters	1300x600x1900	51x24x75	**SU-1360-4-S-Casters**
4 Solid Shelves Unit - leveler legs	1400x600x1900	56x24x75	**SU-1460-4-S**
4 Solid Shelves Unit - on casters	1400x600x1900	56x24x75	**SU-1460-4-S-Casters**
4 Solid Shelves Unit - leveler legs	1500x600x1900	59x24x75	**SU-1560-4-S**
4 Solid Shelves Unit - on casters	1500x600x1900	59x24x75	**SU-1560-4-S-Casters**
4 Solid Shelves Unit - leveler legs	1600x600x1900	63x24x75	**SU-1660-4-S**
4 Solid Shelves Unit - on casters	1600x600x1900	63x24x75	**SU-1660-4-S-Casters**

SHELF UNITS PERFORATED

Shelf Unit Perforated on Legs

Perforated Shelves 400mm Widths / 16" Widths

Product	LxWxH (mm)	LxWxH (")	Cat. No.
4 Perforated Shelves Unit - leveler legs	1000x400x1900	40x16x75	SU-1040-4-P
4 Perforated Shelves Unit - on casters	1000x400x1900	40x16x75	SU-1040-4-P-Casters
4 Perforated Shelves Unit - leveler legs	1100x400x1900	43x16x75	SU-1140-4-P
4 Perforated Shelves Unit - on casters	1100x400x1900	43x16x75	SU-1140-4-P-Casters
4 Perforated Shelves Unit - leveler legs	1200x400x1900	48x16x75	SU-1240-4-P
4 Perforated Shelves Unit - on casters	1200x400x1900	48x16x75	SU-1240-4-P-Casters
4 Perforated Shelves Unit - leveler legs	1300x400x1900	51x16x75	SU-1340-4-P
4 Perforated Shelves Unit - on casters	1300x400x1900	51x16x75	SU-1340-4-P-Casters
4 Perforated Shelves Unit - leveler legs	1400x400x1900	56x16x75	SU-1440-4-P
4 Perforated Shelves Unit - on casters	1400x400x1900	56x16x75	SU-1440-4-P-Casters
4 Perforated Shelves Unit - leveler legs	1500x400x1900	59x16x75	SU-1540-4-P
4 Perforated Shelves Unit - on casters	1500x400x1900	59x16x75	SU-1540-4-P-Casters
4 Perforated Shelves Unit - leveler legs	1600x400x1900	63x16x75	SU-1640-4-P
4 Perforated Shelves Unit - on casters	1600x400x1900	63x16x75	SU-1640-4-P-Casters

Shelf Unit Perforated on Casters

Perforated Shelves 600mm Widths / / 24” Widths

Product	LxWxH (mm)	LxWxH (")	Cat. No.
4 Perforated Shelves Unit - leveler legs	1000x600x1900	40x24x75	SU-1060-4-P
4 Perforated Shelves Unit - on casters	1000x600x1900	40x24x75	SU-1060-4-P-Casters
4 Perforated Shelves Unit - leveler legs	1100x600x1900	43x24x75	SU-1160-4-P
4 Perforated Shelves Unit - on casters	1100x600x1900	43x24x75	SU-1160-4-P-Casters
4 Perforated Shelves Unit - leveler legs	1200x600x1900	48x24x75	SU-1260-4-P
4 Perforated Shelves Unit - on casters	1200x600x1900	48x24x75	SU-1260-4-P-Casters
4 Perforated Shelves Unit - leveler legs	1300x600x1900	51x24x75	SU-1360-4-P
4 Perforated Shelves Unit - on casters	1300x600x1900	51x24x75	SU-1360-4-P-Casters
4 Perforated Shelves Unit - leveler legs	1400x600x1900	56x24x75	SU-1460-4-P
4 Perforated Shelves Unit - on casters	1400x600x1900	56x24x75	SU-1460-4-P-Casters
4 Perforated Shelves Unit - leveler legs	1500x600x1900	59x24x75	SU-1560-4-P
4 Perforated Shelves Unit - on casters	1500x600x1900	59x24x75	SU-1560-4-P-Casters
4 Perforated Shelves Unit - leveler legs	1600x600x1900	63x24x75	SU-1660-4-P
4 Perforated Shelves Unit - on casters	1600x600x1900	63x24x75	SU-1660-4-P-Casters

MINI SHELF

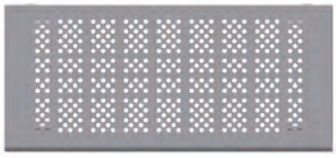

The mini shelf fits anywhere. Wall mounted. Available - solid or perforated. Fabrication material stainless steel 304 with electropolished finish.

Product	LxWxH (mm)	LxWxH (")	Cat. No.
Mini Shelf Solid	600x450x260	24x18x8	**MB06045-S**
Mini Shelf Solid	700x450x260	28x18x8	**MB07045-S**
Mini Shelf Solid	800x450x260	32x18x8	**MB08045-S**
Mini Shelf Solid	900x450x260	36x18x8	**MB09045-S**
Mini Shelf Solid	1000x450x260	40x18x8	**MB10045-S**
Mini Shelf Solid	1100x450x260	44x18x8	**MB11045-S**
Mini Shelf Solid	1200x450x260	48x18x8	**MB12045-S**
Mini Shelf Perforated	600x450x260	24x18x8	**MB-06045-P**
Mini Shelf Perforated	700x450x260	28x18x8	**MB-07045-P**
Mini Shelf Perforated	800x450x260	32x18x8	**MB-08045-P**
Mini Shelf Perforated	900x450x260	36x18x8	**MB-09045-P**
Mini Shelf Perforated	1000x450x260	40x18x8	**MB-10045-P**
Mini Shelf Perforated	1100x450x260	44x18x8	**MB-11045-P**
Mini Shelf Perforated	1200x450x260	48x18x8	**MB-12045-P**

FOLD DOWN MINI SHELF

When not in use this mini shelf can be folded down against the wall. Ideal for tight areas where space is limited. Fabrication material: stainless steel 304 with electropolished finish

Product	LxWxH (mm)	LxWxH (")	Cat. No.
Fold Down Mini Shelf	600x450x260	24x18x8	**WN0601**
Fold Down Mini Shelf	700x450x260	28x18x8	**WN0701**
Fold Down Mini Shelf	800x450x260	32x18x8	**WN0801**
Fold Down Mini Shelf	900x450x260	36x18x8	**WN0901**
Fold Down Mini Shelf	1000x450x260	40x18x8	**WN1001**
Fold Down Mini Shelf	1100x450x260	44x18x8	**WN1101**
Fold Down Mini Shelf	1200x450x260	48x18x8	**WN1201**
Fold Down Mini Shelf - Perforated	600x450x260	24x18x8	**WN0610**
Fold Down Mini Shelf - Perforated	700x450x260	28x18x8	**WN0710**
Fold Down Mini Shelf - Perforated	800x450x260	32x18x8	**WN0810**
Fold Down Mini Shelf - Perforated	900x450x260	36x18x8	**WN0910**
Fold Down Mini Shelf - Perforated	1000x450x260	40x18x8	**WN1010**
Fold Down Mini Shelf - Perforated	1100x450x260	44x18x8	**WN1110**
Fold Down Mini Shelf - Perforated	1200x450x260	48x18x8	**WN1210**

WIP RACK 8" - Floor Mount

This WIP rack is suitable for 8" boxes and SMIF pods. Dedicated ports with integral signing allow easy identification, WIP identification system attachment is also possible. Minimal surfaces keep material clean and safe. Available in a variety of sizes.
Fabrication material: 304 stainless steel, electropolished.

Product	LxWxH (mm)	LxWxH (inch)	Cat. No.
WIP Rack 4 lots	468x330x1555mm	18.5x13x61	SW0402
WIP Rack 8 lots	831x330x1555mm	33x13x61	SW0805
WIP Rack 12 lots	1194x330x1555mm	47x13x61	SW1101
WIP Rack 16 lots	1557x330x1555mm	61x13x61	SW1501

FOUP/FOSB - Shelving

Special nests designed to safely house FOUP & FOSB wafer boxes - used in 300 mm Wafer Fabs.
Fabricated from stainless 304 with electropolished finish.
Delivered flat packed. Assembly instructions included.

Product	LxWxH (mm)	LxWxH (inch)	Cat. No.
FOUP / FOSB Rack - 3 nests	560x537x1768	22x21x70	FR-3
FOUP / FOSB Rack - 6 nests	1096x537x1768	43x21x70	FR-6
FOUP / FOSB Rack - 9 nests	1644x537x1768	65x21x70	FR-9
FOUP / FOSB Rack - 12 nests	2200x537x1768	86x21x70	FR-12

RETICLE STORAGE

These minimal footprint floor mounted racks are designed to protect masks from particulation and ESD. Special structure enables clean air to flow through rack and keep particles off. Each mask is seated in a separate port. This product can be modified according to mask type. An enclosed version with doors is also available.
Fabrication material: 304 stainless steel, electropolished.

Product	LxWxH (mm)	LxWxH (")	Cat. No.
Reticle Mask Storage - 25 slots	240x210x1910	9.5x8.5x75	MSK 25
Reticle Mask Storage - 50 slots	478x210x1910	19x8.5x75	MSK 50
Reticle Mask Storage - 75 slots	710x210x1910	28x8.5x75	MSK 75
Reticle Mask Storage - 100 slots	946x210x1910	37x8.5x75	MSK 100
Reticle Box Storage - 21 slots	750x300x1862	29.5x12x74	BOX 21 RET

CLEANROOM SEATING

Unique Stainless Steel Solutions

CLEANROOM ESD ERGO CHAIR

Palbam Class offers a Cleanroom ESD Ergo Chair which lives up to our reputation for high quality and ergonomics / operator comfort.
The Chairs comply with:
Cleanliness class 4 DIN EN ISO 14644-1
Anti-static and conductive according to DIN EN 61340-5-1:2000.

Seat Height Adjustable 450-640mm

Product	LxWxH (mm)	LxWxH (")	Cat. No.
Cleanroom Chair with conductive casters	700x700x1000-1260		**PCKD0100**
Cleanroom Chair with conductive locking casters	700x700x1000-1260		**PCKD0110**
Cleanroom Chair with flat conductive glides	700x700x1000-1260		**PCKD0120**

Seat Height Adjustable 600-850mm

Product	LxWxH (mm)	LxWxH (")	Cat. No.
Cleanroom Chair with foot-ring & flat ESD glides	700x700x1140-1460		**PCKD0200**

The chairs include the automatic weight adjustment ergo feature - and a tapering backrest offering optimum freedom for shoulders. Options available for conductive glides or casters.
Seat & Backrest Material and Color:
Polyurethane (PU), Black (RAL 9011)
Base Material: Chrome steel.

SST FIXED HEIGHT STOOL

Palbam Class understands that sometimes there is a need for total stainless steel solutions in a cleanroom. For this reason we have a range of stainless stools which can either be on gliders or casters.
Fabrication material stainless steel 304 with electropolished finish.

Product	LxWxH (mm)	LxWxH (")	Cat. No.
SST Fixed Stool - On Gliders	600x600x500		SST-STOOL-G
SST Fixed Stool - On Casters	600x600x500		SST-STOOL-CA

SST HEIGHT ADJUSTABLE STOOL

The new 100% stainless steel adjustable height cleanroom stool meets the needs of customers that are looking for a totally stainless steel seating solution. Seat height adjustable from 450-580 mm. Easy to clean/wipedown, screw mechanism encased by tubing ensuring clean design and increasing aesthetic appeal.
Fabrication material: stainless steel 304 with electropolished finish + Delrin threaded part.

Product	LxWxH (mm)	LxWxH (")	Cat. No.
SST Adjustable Stool - On Gliders	600x600x450-580		SST-ADJ-STOOL-G
SST Adjustable Stool - On Casters	600x600x450-580		SST-ADJ-STOOL-CA

Stool Caster
White nylon caster with stainless steel swivel fork compatible for autoclaves.

Stool Glider
Stainless steel screw in glider with black rubber base compatible for autoclaves.

Palbam Class
SET
DOWN
UP

DESICCATORS

Unique Stainless Steel Solutions

Palbam Class developed its first Desiccator Cabinets for the Semiconductor Industry. Due to the demands of this industry all the cabinets are manufactured from the cleanest materials available.

Most manufacturers offer stainless steel accessories for their Desiccators. Palbam Class uses only Stainless Steel.
All modular designs – and "plug and play"
If you have a product which requires protection from: Particles + Moisture + Oxygen then Palbam Class offers you unique solutions.

Nitrogen is the standard medium for contamination-free storage because it is relatively inert–it neither reacts with stored materials nor carries moisture – and because it can be isolated and purified relatively inexpensively.

Palbam Class Desiccator cabinets are set up so that an appropriate flow of nitrogen forces out all moisture- and contamination-laden air. Because nitrogen has a lower specific gravity than air, it is introduced into the upper section of the desiccator; the heavier air is then purged out of the bottom.

If you require custom designed Desiccators, Palbam Class has an Engineering and Design team which is recognized worldwide as a leader in this field.

BENCH TOP N2 DESICCATOR

Palbam Class Bench Top N2 purge Desiccator Cabinets cut nitrogen expenses by up to 80%.
Automates clean, dry benchtop storage eliminating moisture & oxygen related degradation and optimizing yields.
Ideal for semiconductor components, biological and pharmaceutical samples, and other sensitive materials.
Fully integrated turnkey system takes 30 seconds to install.

Product	LxWxH (mm)	LxWxH (")	Cat. No.
Bench Top N2 Desiccator	600x400x400	24x16x16	UCD-604040
Bench Top N2 Desiccator	600x400x600	24x16x24	UCD-604060
Bench Top N2 Desiccator	800x500x500	32x20x20	UCD-805050
Bench Top N2 Desiccator	800x500x800	32x20x32	UCD-805080

Desiccator has built in RH% sensor and display panel - allowing user to monitor realtime relative humidity levels within the cabinet.
The easy to use control panel allows user to enter the required RH% level - the cabinet then regulates N2 input to ensure the desired RH% levels are maintained.
Fabrication materials: stainless steel 304 with electropolished finish and static dissipative PC windows.

Product	LxWxH (mm)	LxWxH (")	Cat. No.
Shelf solid for Desiccator UCD6040	600x400	24x16	DS-6040
Shelf solid for Desiccator UCD8050	800x500	32x20	DS-8050

Safety Factor

Many uncontrolled N2 cabinets rely on continous flow of N2 into the cabinet. This N2 is also being continously leaked into the cleanroom atmosphere - with the potential risk that this implies to the safety of operators.
Palbam Class N2 desiccator cabinets minimize the N2 usage and therefore minimize the N2 leakage into the cleanroom atmosphere.

The Bench Top Desiccator UCD-604040 can be used as a single unit on a table top or shelf or as units of 2 or 3 in dedicated shelf units.

Product	LxWxH (mm)	LxWxH (")	Cat. No.
Desiccator Stand - 2 units			DSTAND-604040-2
Desiccator Stand - 3 units			DSTAND-604040-3

N2 DESICCATORS - General storage

The ideal product for Ultraclean low humidity storage. Turnkey product. Includes automatic control system allowing manual or automatic purging. The automatic trickle purge saves on inert gas input.
Door sensors activate when doors opened to close purging to prevent gaseous escape and wastage. Door closing activates high purge to reduce humidity levels fast.
All plumbing integrated. Adjustable shelving. Modular design. Fabrication material : 304 stainless steel with electropolished finish.

Includes in-line gas filter and ultraclean valves.

Product	LxWxH (mm)	LxWxH (")	Cat. No.
Desiccator Cabinet - 1 Chamber	820x490x1700	32x19x67	PCSE0902
Desiccator Cabinet - 2 Chamber	820x490x2000	32x19x80	PCSE0801

N2 DESICCATOR CABINET - FOUP storage

Ultraclean N2 purging cabinet - Dessicator, is fully automated allowing full control of N2 input according to requirements. This is the ideal solution for low humidity storage. This unit is specifically designed for four 300mm FOUP pods. This cabinet is typically used to store pre purged FOUP pods for long periods of storage. Fabrication material : 304 sst, electropolished. High purity materials.

Includes in-line gas filter and ultraclean valves.

Product	LxWxH (mm)	LxWxH (")	Cat. No.
N2 Desiccator Cabinet - FOUP Storage	683x580x2130	27x23x84	PCSE0605

CARTS & LADDERS

Unique Stainless Steel Solutions

UTILITY CARTS

The Cleanroom carts are designed to withstand heavy loads.
Up to 60kg per shelf.
Integral raised ledges prevent parts from rolling off and are easy to wipe down.

Options include:
2 or 3 shelves
Solid or perforated.
Special non-marking, smooth running 5" cleanroom casters
(2 with brakes) supplied with every cart
Fabrication material: 304 stainless steel, electropolished.
Shipped Flat Packed with assembly instructions.

Product	LxWxH (mm)	LxWxH (")	Cat. No.
Cleanroom Utility Cart - 2 solid shelves	550x550x990	22x22x39	**UC-55-2**
Cleanroom Utility Cart - 2 solid shelves	865x550x990	34x22x39	**UC-85-2**
Cleanroom Utility Cart - 3 solid shelves	550x550x990	22x22x39	**UC-55-3**
Cleanroom Utility Cart - 3 solid shelves	865x550x990	34x22x39	**UC-85-3**
Cleanroom Utility Cart - 2 perforated shelves	550x550x990	22x22x39	**UCP-55-2**
Cleanroom Utility Cart - 2 perforated shelves	865x550x990	34x22x39	**UCP-85-2**
Cleanroom Utility Cart - 3 perforated shelves	550x550x990	22x22x39	**UCP-55-3**
Cleanroom Utility Cart - 3 perforated shelves	865x550x990	34x22x39	**UCP-85-3**

NEW AUTOCLAVABLE CARTS

Palbam Class now offers fully autoclavable carts based on the utility carts above however with special autoclavable fork and caster. These are less smooth running than the Utility Carts but if they have to be autoclavable they are a great solution.
Simply remove the UC from catalog # and add AC.
Example: Autoclavable cart 2 solid shelves 865x550x990mm is AC-85-2

CHEMICAL TRANSPORT CART

This high quality cart has been designed to safely transport chemical containers throughout the cleanroom.
• Shelves height adjustable.
• Shelf covers are removable to allow easy wipedown.
• Anti vibration system in each wheel, reducing vibrations to breakable canisters. (optional)
• Remainder of cart fabricated from sst 316 with electropolished finish. Significantly lighter than standard polypropylene carts reducing maneuvering efforts.

Product	LxWxH (mm)	LxWxH (")	Cat. No.
Chemical Transport Cart with anti vibrations casters	1148x558x1141	45x22x45	**CY0004**
Chemical Transport Cart with regular cleanroom casters	1148x558x1141	45x22x45	**CY0006**

PARTICLE COUNTER TRANSPORT CART

This cart is specially designed for transporting **particle sensing machines** around the cleanroom environment. Ergonomic design. (optional) Shock absorbing system in each wheel protects the valuable particle sensor from vibrations and shocks.
We recommend the carts with anti-vibration casters for Semi-conductor cleanrooms with perforated floors.
We recommend the carts with regular cleanroom casters for Pharma cleanrooms.
Telescopic arm attached to cart allows sensor placement to a height of 3m. Jointed arms at the end of the telescopic arm enable positioning of sensor underneath hoods and in awkward places.
Fabrication material: 304 stainless steel, electropolished.

Can be ordered with or without the telescopic arm.

With Anti-Vibration Casters

Product	LxWxH (mm)	LxWxH (")	Cat. No.
Particle Counter Transport Cart - solid shelves	691x490x1000	27x19x39	**PCCS0701**
Particle Counter Transport Cart - perforated shelves	691x490x1000	27x19x39	**PCCS0702**
Particle Counter Transport Cart - solid LARGE shelves	917x490x1000	36x19x39	**PCCS0902**

With Regular Cleanroom Casters

Product	LxWxH (mm)	LxWxH (")	Cat. No.
Particle Counter Transport Cart - solid shelves	691x490x1000	27x19x39	**PCCS0721**
Particle Counter Transport Cart - perforated shelves	691x490x1000	27x19x39	**PCCS0722**
Particle Counter Transport Cart - solid LARGE shelves	917x490x1000	36x19x39	**PCCS0922**

Telescopic Arm for sensor carts
3m height extendable / 1m horizontal extendable.

Fabrication materials: stainless steel and anodized aluminum. Anodized aluminum may be black or steel color.

Product	Cat. No.
Telescopic Arm for sensor carts	**96525700**

WAFER TRANSPORT CARTS

Features
- The 8" WIP cart is designed to carry SMIF pods and regular boxes too.
- The nest holds the product firmly and prevents it from sliding and rocking.
- A patented shock absorber system is integrated into each wheel.
- Superb castors and large bumpers allow easy and safe driving of cart.
- The cart, which is compact in size, is easy to maneuver within the busy clean room, especially through narrow isles.
- Fabrication material: 304 stainless steel, electropolished.

Benefits
- Wafer protection results in higher yields.

Product	LxWxH (mm)	LxWxH (")	Cat. No.
8" WIP Carts - 4 nests	884x400x935	35x16x37	**4-PWC**
8" WIP Carts - 6 nests	884x470x1220	35x19x48	**6-PWC**

This cart is designed to transport open cassettes. The special nests are connected to cart frame by 4 spring loaded dampers, reducing vibrations.

Product	LxWxH (mm)	LxWxH (")	Cat. No.
8" Wafer Cassette Transport Cart - 4 nests	1010x750x1105	40x30x43	**4-PCC**
8" Wafer Cassette Transport Cart - 6 nests	1400x750x1105	55x30x43.5	**6-PCC**

This cart is designed to transport FOUP & FOSB wafer containers used in 300mm wafer manufacturing.

Product	LxWxH (mm)	LxWxH (")	Cat. No.
12" Wafer Transport - FOUP / FOSB - 1 nest	738x590x1231	29x23x49	**1-PFC**
12" Wafer Transport - FOUP / FOSB - 2 nests	1211x590x1231	48x23x49	**2-PFC**
12" Wafer Transport - FOUP / FOSB - 4 nests	1211x590x1231	48x23x49	**4-PFC**

TOOL CART – 5 DRAWERS

This newly designed ultraclean stainless steel fully electropolished Tool Cart features:
• 5 fully extendable drawers.
• One lock which secures all the drawers.
• Top ledge to prevent tools/parts falling.
• Cleanroom castors with brakes.
Fabrication material: Stainless Steel 304 with Electropolished finish.
We can customize to your requirements.
In Stock

Product	LxWxH (mm)	LxWxH (")	Cat. No.
Tool Cart	730x470x850	29x18.5x34	**CT0702**

TOOL CART – 6 DRAWERS

Stainless Steel high quality Cleanroom Tool Cart with modern clean design.
• 6 Drawers are fully extendable.
Each Drawer has a lock.
• Raised edge on top surface prevents parts from accidentally falling.
• Supplied with Cleanroom casters (2 with brakes).
Fabrication material: 304 stainless steel, electropolished.

Product	LxWxH (mm)	LxWxH (")	Cat. No.
Tool Cart	730x470x1000	29x18.5x39.5	**CT0704**

TOOL CART – 8 DRAWERS

Stainless Steel high quality Cleanroom Tool Cart with modern clean design.
• 8 Drawers are fully extendable. 2 large, 2 medium and 4 small drawers.
• Raised edge on top surface prevents parts from accidentally falling.
• Supplied with Cleanroom casters (2 with brakes).
Without Drawer locks.
Fabrication material : 304 stainless steel, electropolished.

Product	LxWxH (mm)	LxWxH (")	Cat. No.
Tool Cart	900x600x1193	35.5x24x47	**CT0710**

STEP LADDERS - Mobile

Maneuverable step ladders with mooncastors.
While weight is applied on the first step, wheels retract and the moon cups with cleanroom approved nylon guards sit firmly on the floor, ensuring a safe climb.
Height of top step from ground level when weight is applied are as follows:
1 step ladder - 201mm
2 step ladder - 520mm
3 step ladder - 609mm
4 step ladder - 782mm
5 step ladder - 1140mm (this ladder is equipped with side stabilizers)

The ladders:
STLD-1
STLD-2
STLD-3
are held in stock for immediate shipment.

All the ladders can be manuevred by a single person and are ideal if they have to be moved often.
Fabrication material: 304 stainless steel, electropolished.
Mechanism parts are made of SST.

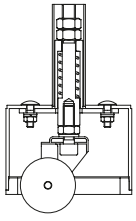

Product	LxWxH (mm)	LxWxH (")	Cat. No.
1 step ladder with retractable casters	600x300x200	24x12x8	**1-STLD**
2 step ladder with retractable casters	805x500x600	32x25x24	**2-STLD**
3 step ladder with retractable casters	632x832x1509	25x33x60	**3-STLD**
4 step ladder with retractable casters	900x1025x1713	36x40x68	**4-STLD**
5 step ladder with fixed casters & side stabilizers	800x1520x2200	32x60x87	**5-STLD**

STEP LADDERS - NON MOBILE

The non mobile range of step stools are identical to the mobile range except that they have leveling feet instead of the retractable casters. These step stools are designed for fixed locations where they are not required to be moved often. Fabrication material: 304 stainless steel with electropolished finish.

Product	LxWxH (mm)	LxWxH (")	Cat. No.
1 step ladder - non-mobile	600x300x200	24x12x8	**1-LAD-NM**
2 step ladder - non-mobile	805x500x600	32x25x24	**2-LAD-NM**
3 step ladder - non-mobile	632x832x1509	25x33x60	**3-LAD-NM**
4 step ladder - non-mobile	900x1025x1713	36x40x68	**4-LAD-NM**
5 step ladder - non-mobile	800x1280x2000	32x51x79	**5-LAD-NM**

Custom Step Ladder Designs Possible

WAFER CASSETTE

Unique Stainless Steel Solutions

The dramatic increase in the level and complexity of cleanliness and automation requirements in Semiconductor Fabs, requires wafer cassettes that offer a reduction in particle generation and improved mechanical interface capabilities with automated material-handling systems (AMHS's) and process tools.

Palbam Class Stainless Steel cassettes have the following properties:

- Non contaminating
- Non deforming
- Highly accurate dimensions - robotic suitability
- Withstands baking processes up to 400°C
- Designed and manufactured to 'Semi' standards
- "H" Bar where stated
- Fully conductive
- Cassette design allows uniform heat distribution over the wafer surface

Stainless steel has excellent stable molecular properties. High surface quality -20RA - is much superior to any petro-chemical material - no out gassing. Stainless steel is much softer than silicon - in the category of Rockwell B.
The cassettes are fabricated from stainless steel 316

4"&5" WAFER CASSETTE

4 inch stainless steel wafer cassette for bake oven. Includes H Bar and slide on cover to prevent wafer exit. 25 slots. Withstand bake temperatures up to 400˚C.

Product	LxWxH (mm)	LxWxH (")	Cat. No.
4" Wafer Cassette	132.5x143x115		PCPC0101

5 inch stainless steel wafer cassette for bake oven. 50 slots. Withstand bake temperatures up to 400˚C.

Product	LxWxH (mm)	LxWxH (")	Cat. No.
5" Wafer Cassette	135.5x269x155		PCPC0121

6"-150mm WAFER CASSETTE

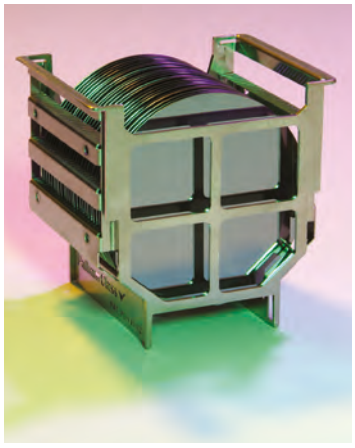

The Palbam Class™, innovative Stainless Steel wafer cassette is designed to replace standard plastic cassettes, in the semiconductor manufacturing process. The cassette has been designed to SEMI standard. 6 inch wafer bake cassettes with H Bar & either 25 or 12 slots.

Properties:

- non-contaminating.
- non-deforming.
- fully conductive.
- withstands temperatures up to 400˚C.
- with "H" bar.
- dimensions are highly accurate.
- weighs 800 gr.
- designed for both manual and robotic handling.
- fits into standard boxes.
- Fabrication material: 316 stainless steel.
- Handle - optional.

Product	LxWxH (mm)	LxWxH (")	Cat. No.
6" Wafer Cassette - 25 slots	178x144x171		PCPC0154
6" Wafer Cassette - 12 slots			PCPC0155

8”-200mm WAFER BAKE CASSETTES - With H Bar

PCPC0210
8 Inch round wafers
H bar
25 wafer slots
Robotic or push transfer loading

Product	LxWxH (mm)	LxWxH (")	Cat. No.
8" Wafer Cassette	210x217x220		**PCPC0210**

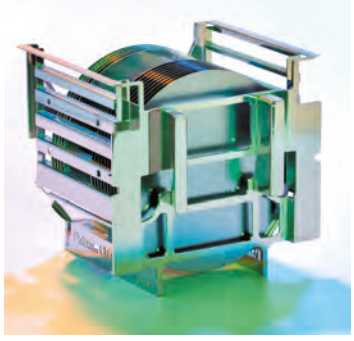

PCPC0207
8 Inch round wafers
H bar
25 wafer slots
Additional handles
Modeled on specific plastic cassette
Robotic or push transfer loading

Product	LxWxH (mm)	LxWxH (")	Cat. No.
8" Wafer Cassette	233.5x222x220		**PCPC0207**

PCPC0205
8 Inch round wafers
H bar
12 wafer slots
Robotic or push transfer loading

Product	LxWxH (mm)	LxWxH (")	Cat. No.
8" Wafer Cassette	233.5x203x220		**PCPC0205**

PCPC0214
8 inch round wafers
H Bar
13 slots
Robotic or push transfer loading

Product	LxWxH (mm)	LxWxH (")	Cat. No.
8" Wafer Cassette	233.5x220x220		**PCPC0214**

8" - 200mm BAKE CASSETTES - Without H Bar

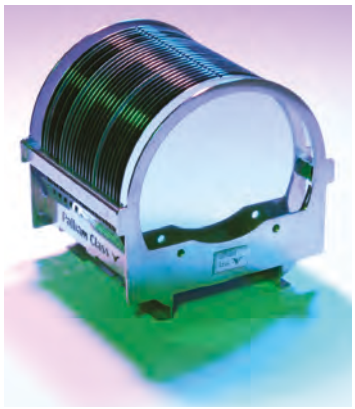

8 inch round wafers
Without H Bar
25 wafer slots

Product	LxWxH (mm)	LxWxH (")	Cat. No.
8" Wafer Bake Cassette	226x189x1900		PCPC0203

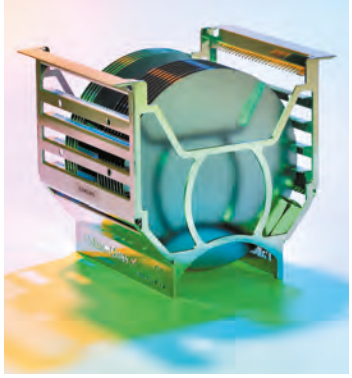

8 inch round wafers
Without H Bar
25 wafer slots
Robotic or push transfer loading

Product	LxWxH (mm)	LxWxH (")	Cat. No.
8" Wafer Bake Cassette	255x202.4x218		PCPC0208

We offer custom designs to fit your dimensions

HANDLE 6" AND 8"

Handle for 6" and 8" cassettes

Product	LxWxH (mm)	LxWxH (")	Cat. No.
Handle for 6 inch cassettes			HANDLE-6
Handle for 8 inch cassettes			HANDLE-8

12”- 300mm WAFER BAKE CASSETTES

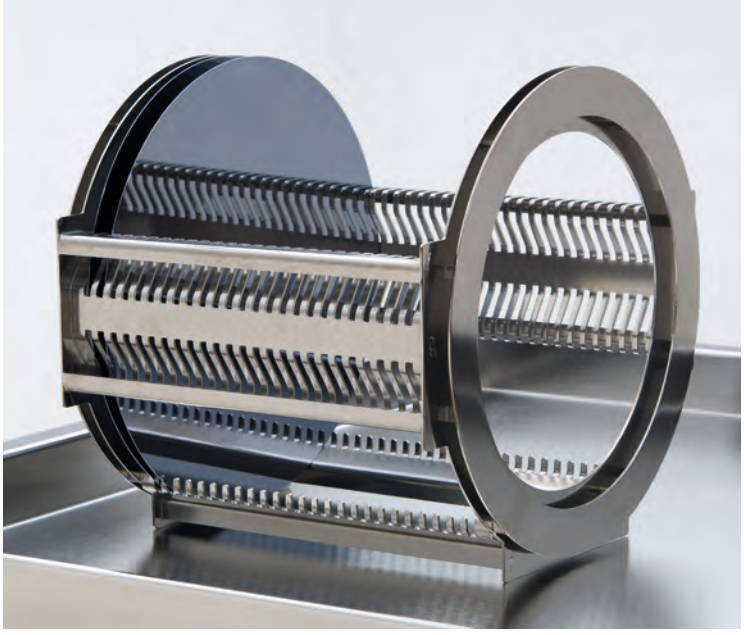

Product	LxWxH (mm)	LxWxH (")	Cat. No.
12" Wafer Cassette - 25 slots	324x293x305		**PCPC0301**

12 inch stainless steel wafer cassette for bake oven.
25 slots.
Withstand bake temperatures up to 450˚C.
Lightweight design - weighs only 3.4 kg.

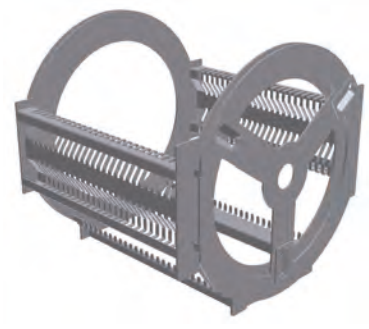

Features & Benefits

Stainless steel construction allows cassette to withstand bake temperatures up to 450˚C.
Open design allows even heat distribution of wafer surface.
Unique design keeps weight down to 3.4kg.
Dedicated kinematic adapter allows cassette to be placed on a stage conforming to SEMI Std.
Fully conductive
Non outgassing.

SEMI Standard E-57 compatible.

Product	LxWxH (mm)	LxWxH (")	Cat. No.
12" Wafer Cassette - 25 slots with kinematic couplings	324X307X305		**PCPC0305**
12" Wafer Cassette – 25 slots with kinematic couplings and handles	324X307X305		**PCPC0306**

DISTRIBUTION & PRICING

NORTH AMERICA

USA & CANADA

Palbam Class is represented by a network of local specialized cleanroom Distributors within the USA & Canada.
Contact Palbam Class directly (through the website) and you will be directed to your local cleanroom representative.
Web: www.palbamclass.com
USA Toll Free Tel: 888-641-2466
E mail: info@palbamclass.com

EUROPE

Palbam Class is distributed throughout all countries in Europe by

VWR-AVANTOR
https://www.avantorsciences.com/de/en/

OTHER LOCATIONS WORLDWIDE

All other worldwide locations should contact Palbam Class Headquarters at:

Palbam Class – (Cleanroom Division of Palbam 2008 AC Ltd)
En Harod Ihud, 18960, Israel
Tel: +972-4-6530783
E mail: info@palbamclass.com
Web: www.palbamclass.com

PRICING

For up-to-date pricing including delivery contact either:

- Your local country representative or
- Contact Palbam Class through the website REQUEST FOR QUOTE facility

If in doubt contact us at info@palbamclass.com

©
Copyright 2018 Palbam Class
All rights reserved

COMPANY PROFILE

Palbam Class - When Quality Matters

If you are searching for high end cleanroom furniture & equipment - then you have come to the right place. Palbam Class has a worldwide reputation for supplying the very highest quality cleanroom products to all the Cleanroom Industries - Pharma, Biotech, Microelectronics, Nanotechnology etc.The products range from Cleanroom Furniture (tables, dispensers, gowning furniture, cabinets & racks) to Cleanroom Equipment (carts, ladders, metal wafer cassettes & ultraclean nitrogen purging solutions). You can request pricing through the Request for Quote facility - and if you want to receive the catalog just complete the contact form in contact us on the website.

Distributors Worldwide

Palbam Class has a worldwide network of Distributors. When you send to us your Request for Quote through our website - your request will be answered by either our main office or a distributor near you within 24 hours. This fast, personal service worldwide offers you an unmatched service.

About the Request for Quote List

We understand that todays customers want to receive answers immediately. Each product on our website can be added to your Request for Quote list. Simply complete the form and send to us your request for quote. We will endeavour to reply within 24 hours with product pricing and shipping costs to your location. If you experience any problems with this facility, then simply send your request by e-mail direct to info@palbamclass.com

Flat packed designs for economic shipping

Palbam Class unique flat packed designs enable almost all Palbam Class products to be shipped economically and installed at the customers convenience.

One Year Warranty

All Palbam Class products are covered by a one year warranty. We will immediately replace defective or damaged parts or products - giving you peace of mind.

Palbam Metal Industries

Palbam Class is the cleanroom division within the Palbam Metal Industries group www.palbam.co.il

Copyright Protection

The Palbam Class catalog & website are copyrighted and registered. All pictures and texts are unique to Palbam Class and under ownership of Palbam Class. Any unauthorised copying or using of Palbam Class material will be open to legal compensation.

Palbam Class Product Advantages include

• Electro-polished
(years of experience has allowed us to know how to design products so they can be properly electro-polished)
• Non-particulating
• Non accumulating
• Non flammable
• Long shelf life
• Modular
• Ergonomic designs
• User friendly
• Easy installation and maintenance free

Advantages of Electro-polishing over Mechanical Polishing include

• Improves Corrosion resistance
• Improves surface smoothness
• Improves surface reflectivity and brightness
• Hygienically clean surface
Facilitates maintenance of a hygienically clean surface that is resistant to bacteria growth due to a smoother surface and the dissolution of embedded contaminants.
• Easier Cleaning
• Less Particles
Because electro polishing is not a surface coating there is no risk of the surface distortion or peeling over time.
• Aesthetically appealing
• Polishing & passivating inaccessible areas
Polishing & passivating inaccessible areas & intricate surfaces that are inaccessible to mechanical polishing.

Palbam Class products are ideally suited for Cleanroom Class 10-10,000/ISO 4 - ISO 7

Class	maximum particles/ft³					ISO equivalent
	0.1 µm	0.2 µm	0.3 µm	0.5 µm	5 µm	
1	35	7	3	1		ISO 3
10	350	75	30	10		ISO 4
100		750	300	100		ISO 5
1,000				1,000	7	ISO 6
10,000				10,000	70	ISO 7
100,000				100,000	700	ISO 8

CONTENTS

FURNITURE

GOWNING
08 Gownracks
09 Wall Hooks
10 Hepa Filtered Gown Cabinet
11 Bootie Racks
12 Benches
13 Swing Over Benches
14 Bootie Bench
15 Fold Down Bench
16 Wipedown Tables
17 Feeder Cabinets
18 Recycle Cabinets
19 Waste Receptacles
20 Cleanroom Layouts
21 Accessories

DISPENSERS
24 Disposables Dispensers
25 Sterile Glove Dispensers
26 Gown, Hood, Eye Glass & Wipes Dispensers
27 Disposal Cabinet & Frame

WORKSTATIONS
30 Ergo Tables
31 Ergo Table Solid
32 Ergo Table Perforated
33 Ergo Table Rod
34 Ergo Table Shelving
35 Heavy Duty Tables
36 Heavy Duty Table Solid
37 Heavy Duty Table Perforated
38 Heavy Duty Table Shelving
39 Workstation Accessories
40 Custom Tables - Height Adjustable
41 Laptop and Flat Screen Workstations
43 Cleanroom Sinks

STORAGE
46 Full Length Cabinets
47 Cleaners Cabinet
48 Cabinets with Glass Doors
49 3/4 & 1/2 Height Cabinets
50 Drawers Units
52 Wall Mount Cabinets
53 Passthrough Cabinets
54 Gowning Cabinets
55 Flat Packed Cabinets
56 Shelf Units - solid shelves
57 Shelf Units - perforated shelves
58 Mini Shelves
59 Wafer Storage Racks

SEATING
62 ESD ERGO Chairs
63 SST Stools

EQUIPMENT

DESICCATORS
66 Bench Top N2 desiccator
67 General & FOUP Desiccators

CARTS & LADDERS
70 Utility Carts
70 Chemical Cart
71 Particle Counter Transport Cart
72 Wafer Transport Carts
73 Tool Carts
74 Step Ladders – Mobile
75 Step Ladders –Non Mobile

WAFER CASSETTES
78 4, 5 & 6" Wafer Cassettes
79 8" Wafer Cassettes – With H Bar
80 8" Wafer Cassettes
81 12" Wafer Cassette

DISTRIBUTION & PRICING
82 Distribution & Pricing

84 **COMPANY PROFILE**

85 **PRODUCT ADVANTAGES**

WWW

Contact Palbam Class directly

We will then put you in contact with our local distributor in your country.

The constant development of new products enables us to present innovative top standard furnishing & equipment solutions at best value.

Please visit our website **www.palbamclass.com** frequently visited by thousands of customers searching for high quality cleanroom products. Simple browsing of the complete catalog, constant updating and additional information – result in a very handy tool for anyone in the cleanroom industry.